扫描可下载此文件

TF–12/1250–25(2419)

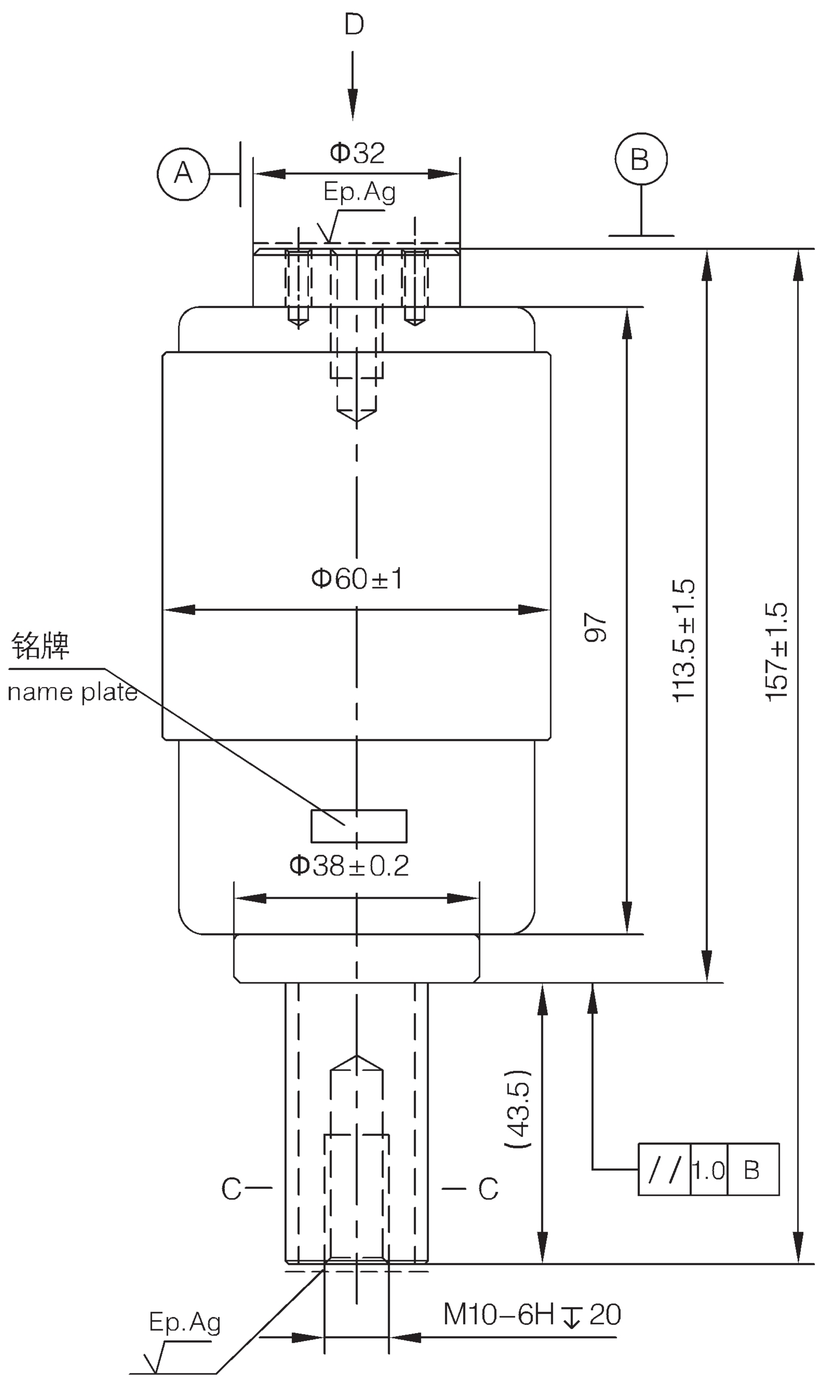

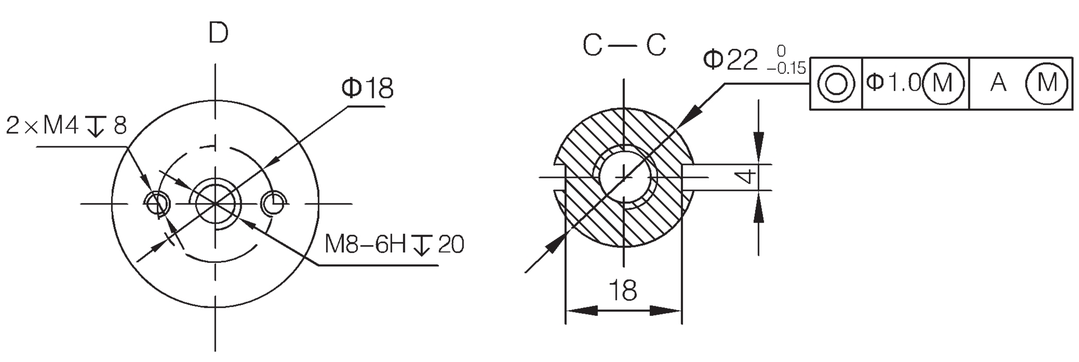

主要技术参数（MAIN TECHNICAL DATA）

参数名称（Data）	单位（Unit）	数值（Value）
额定电压 Rated Voltage	kV	12
雷电冲击耐受电压（峰值） Lightning Impulse Withstand Voltage (Peak)	kV	85 ★
短时（1min）工频耐受电压 Short–time (1min) Power–frequency Withstand Voltage	kV	48 ★
额定频率 Rate Frequency	Hz	50/60
额定电流 Rated Current	A	1250
额定短时耐受电流 Rated Short–time Withstand Current	kA	25
额定短路持续时间 Rated Duration of Short–circuit	s	4
额定峰值耐受电流 Rated Peak Withstand Current	kA	63
额定短路关合电流 Rated Short–circuit Making Current	kA	63
额定有功负载开断电流 Rated Active Load Breaking Current	A	1250
额定闭环开断电流 Rated Closed–loop Breaking Current	A	1250
额定单个电容器组开断电流 Rated Single Capacitor Bank Breaking Current	A	400※
额定背对背电容器组开断电流 Rated Back–to–back Capacitor Bank Breaking Current	A	400※
额定电缆充电开断电流 Rated Breaking Current of Cable Charging	A	10
机械寿命 Mechanical Endurance	次 Operations	10000
触头开距 Clearance Between Open Contacts	mm	8 ± 1
触头自闭力 Contact Closed Force Due to Bellows and Atmosphere	N	70 ± 30
触头反力 Counterforce of Contact at Full Stroke	N	120 ± 30
额定触头压力下限时的回路电阻 Circuit Resistance at Min. Rated Contact Force	μ Ω	≤ 30
触头允许磨损厚度 Contact Limit Erosion	mm	3
运动部分的质量 Mass of Moving Parts	kg	0.4
内部气体压力 Internal Pressure	Pa	$<1.33\times10^{-3}$
允许储存期 Shelf Life	年 Year	20

配套的真空开关设备应满足的机械参数

MECHANICAL DATA OF VACUUM SWITCH EQUIPPED WITH THE INTERRUPTERS

参数名称（Data）	单位（Unit）	数值（Value）
平均分闸速度 Average Opening Speed	m/s	1.0 ± 0.2
平均合闸速度 Average Closing Speed	m/s	0.6 ± 0.2
触头合闸弹跳时间 Contact Bounce Duration at Closing Operation	ms	≤ 3
触头合闸和分闸不同期 Out of Simultaneity of Contact Closing and Opening	ms	≤ 1

参数名称（Data）	单位（Unit）	数值（Value）
额定触头压力 Rated Contact Pressure	N	800^{+200}_{0}
触头最大分闸反弹量 Max. rebound of contact at opening Operation	mm	2
触头分闸允许过冲 Overtravel during Opening	mm	≤ 2

注 1：★在变压器油中或等效绝缘介质中　　Note1：★ Within transformer oil or equivalent isolation medium.
注 2：※ 为需要时提供的额定参数。　　Note2:※Rated characteristics to be given on request.
注 3：产品符合或超过 IEC60265–1 和 GB/T3804–2004 中 E2 级的要求。
Note3: Meets or exceeds the electrical endurance requirements of class E2 for IEC60265–1 and GB/T3804–2004.
注 4：真空灭弧室动导电杆上能承受的扭力矩≤ 30N.m，组装时应采取措施防止动导电杆转动，以避免损伤波纹管。具体使用要求见《安装使用说明书》。
Note4:The movable stem of the VI could only suffering no more than 30N.m twisting force and in order not to damage the metal bellows, the movable stem should be prevent from rotation when assembling. For more requirements please check the Instructions of Usage.