產品概述
PRODUCTS OVERVIEW

产品特点
Products Features

精密行星齒輪減速機是我公司自主研發的新一代實用性產品，融合了國內外先進的技術，具有以下一些主要特點：
1. 低噪音：低於 65db。
2. 低背隙：單級可達 3 弧分內，雙級可達 5 弧分內。
3. 高效率：單段式在 95% 以上，雙段式在 92% 以上。
4. 高輸入轉速：可達 8000RPM。
5. 高扭矩：比一般標準行星減速機扭矩高。
6. 高穩定性：採用高強度合金鋼材，整顆齒輪經硬化處理，非只有表面硬化，確保使用壽命及長期使用仍保持最初的精密度。
7. 高減速比：採用模組化設計，行星齒箱可相互連結，速比可達 1/1000 以上。

Precision planetary gearbox is a new-generation product developed by our company, which integrates advanced technologies at home and abroad, its main features are as follows:
1.Low Noise: Under 65db.
2.Low Backlash: Backlash less than 3 arcmin for single stage. Less than 5 arcmin for two stages.
3.High Efficiency: Above 95% for single stage, above 92% for two stages.
4.High Input Speed: up to 8000 RPM.
5.High Torque: Higher torque output than conventional standard planetary gearboxes.
6.High Stability: Employs high tensile strength alloy steel. Gear hardening is made for the entire gear instead of only surface hardening, which extends gear service life and maintain high accuracy as new after a long period of operation.
7.High Reduction Ratio: with modular design. the planetary gear boxes can be interconnected, speed reduction ratio could be over 1/1000.

產品用途
Application

精密行星齒輪減速機被廣泛應用於以下領域：
1. 航空航天、軍事產業。
2. 醫療衛生、電子資訊技術產業。
3. 工業機器人、生產自動化、數控機床製造產業。
4. 汽車製造、紡織、印刷、食品、冶金、環保工程、倉儲物流等產業。

Precision Planetary Gear Reducer is widely used in the fields：
1.Aerospace, military industry.
2.Medical health, electronic information technology industry.
3.Industrial robots, Production automation, CNC machine tool manufacturing industry.
4.Motor, textile, printing, food, metallurgical, environmental protection engineering and warehouse logistics industry.

產品特性
PRODUCTS FEATURES

以 GPB 系列為例
Take GPB series as an example

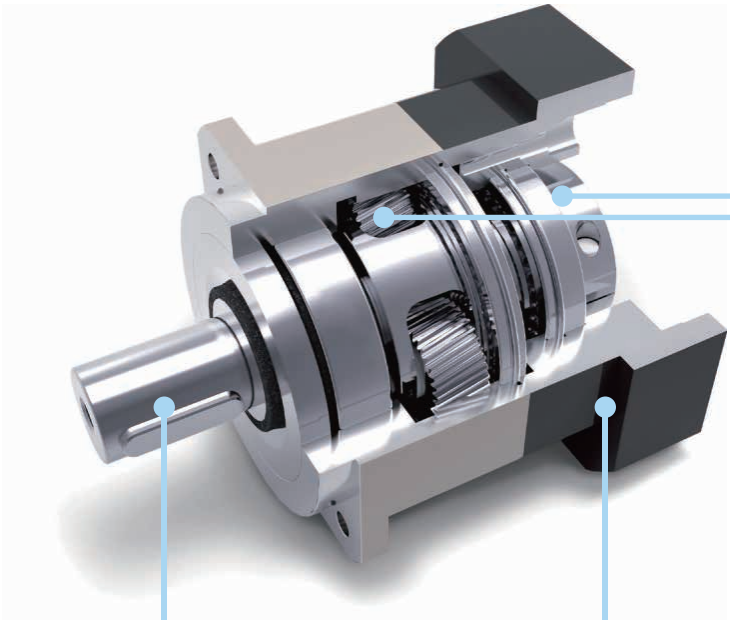

輸入軸與鎖緊裝置採用一體化設計，雙螺栓對稱分佈，達到動平衡的同時，通過雙螺栓的強力鎖死，有效防止電機軸傳動打滑，實現高精度零背隙的動力傳送。

The input shaft and locking device adopt integrated design, and the double bolts are symmetrically distributed to achieve dynamic balance. At the same time, the strong locking of the double bolts effectively prevent the motor shaft transmission from slipping and realize high-precision power transmission with zero backlash.

齒輪材料採用優質合金鋼，經碳 - 氮共滲處理，從而獲得最佳的耐磨性和耐衝擊韌性。

The gear material is made of high-quality alloy steel and treated by nitrocarburizing, so as to obtain the best wear resistance and impact toughness.

輸出行星架採用一體式（雙支撐）的結構設計，前後軸承大跨距分佈於箱體內，形成穩定的一體式結構，以確保較高的扭轉剛性和精度。

The output planet carrier adopts integrated (double support) structural design, and the front and rear bearings are distributed in the housing with a large span to form stable integrated structure to ensure high torsional rigidity and accuracy.

齒圈與輸出殼體採用一體化設計，採用優質鋼材，經熱鍛成形，從而獲得較高的材料密度。一體化設計能保證所有幾何尺寸一次性加工完成，與其它內嵌式、夾裝式等結構相比具有更高的精度和強度。

The gear ring and output housing adopt integrated design and high-quality steel, and formed by hot forging, so as to obtain high material density. The integrated design can ensure that all geometric dimensions can be processed at one time, and has higher precision and strength compared with other embedded and clamping structures.

利用 ANSYS 技術對齒輪強度進行有限元分析，同時對齒面作齒形及導程修整，以減低齒輪嚙合的衝擊和噪音，增加齒輪系的使用壽命。

The finite element analysis of gear strength is carried out by using ANSYS technology, and the tooth profile and lead are trimmed on the tooth surface to reduce the impact and noise of gear meshing and extend the service life of gear system.

如何選型
Model Selection

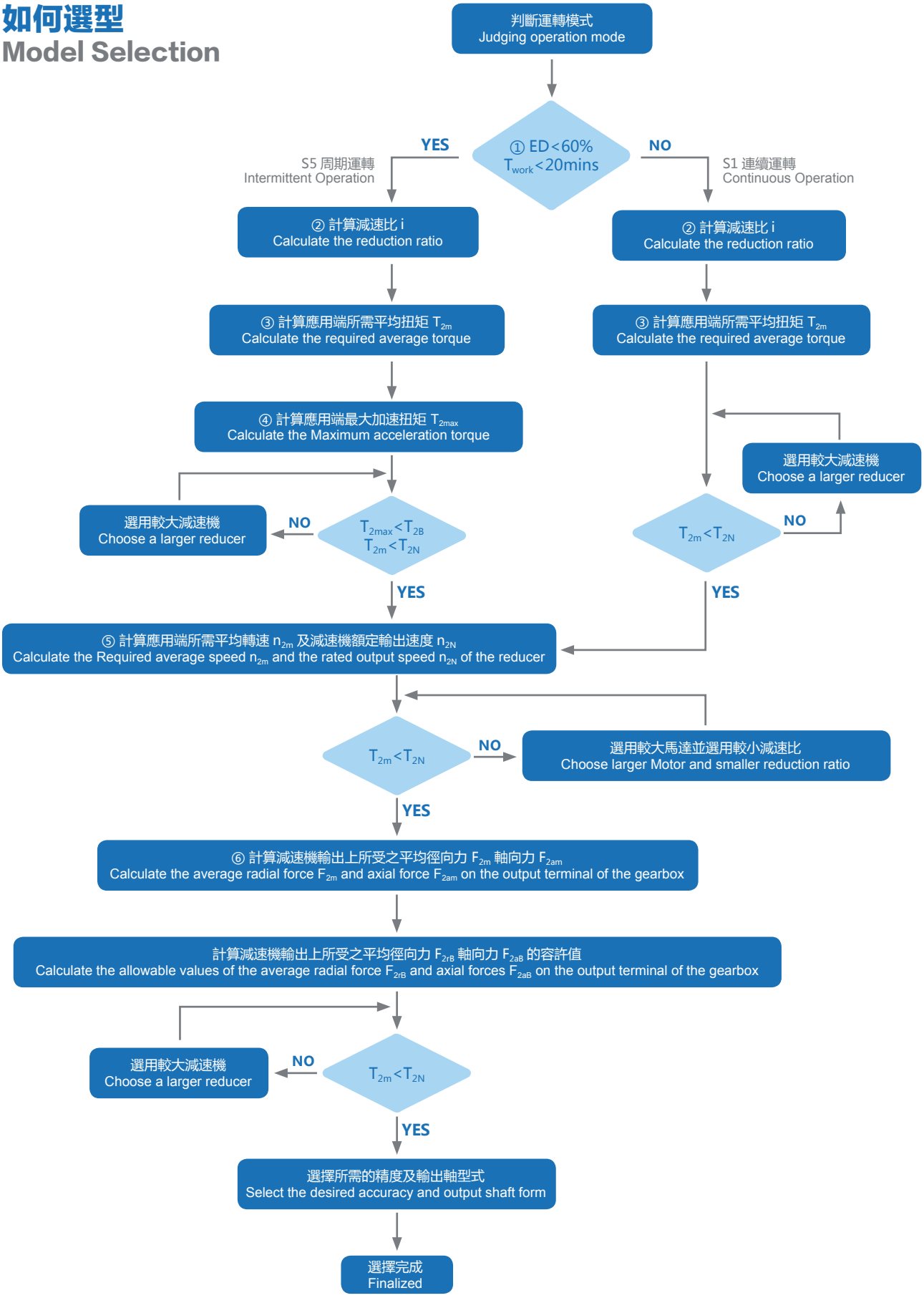

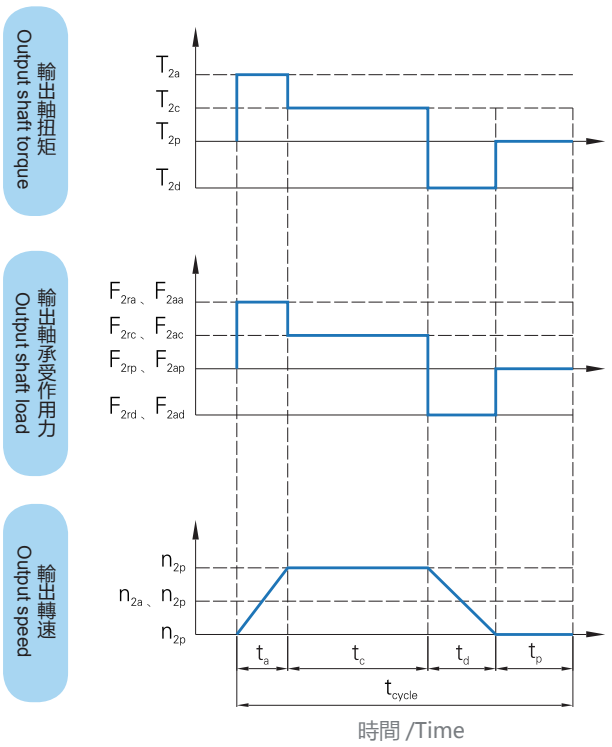

S5 周期運轉建議，一般應用慣量須符合以下公式：
S5 suggestions for cycle operation General application inertia must conform to the following formula:

$$\frac{J_L}{i^2} \leqslant 4xJ_m$$

最適當的應用慣量須符合以下公式：
The most appropriate application inertia must conform to the following formula:

$$\frac{J_L}{i^2} \cong J_m$$

J_L：負載慣量 /Load inertia
J_m：馬達慣量 /Motor inertia

①

$$ED=\frac{t_a+t_c+t_d}{t_{cycle}}x100\%\ ,\quad t_{work}=t_a+t_c+t_d$$

a：加速 /accelerate　c：等速 /constant
d：減速 /deelerate　p：停止 /stop

②

$$i \cong \frac{n_m}{n_{work}}$$

nm：馬達輸出速度 /Motor output speed
nwork：實際應用速度 /Actual application speed

③

$$T_{2m}=\sqrt[3]{\frac{n_{2a}xt_axT_{2a}^3+n_{2c}xt_cxT_{2c}^3+n_{2d}xt_dxT_{2d}^3}{n_{2a}xt_a+n_{2c}xt_c+n_{2d}xt_d}}$$

④

$$T_{2max}=T_{mB}xixk_sx\ \eta$$

Ks 負載系數 Load Factors	Ks	周期次數 / 小時 Cycles/Hours
	1.0	0~1000
	1.1	1000~1500
	1.3	1500~2000
	1.6	2000~3000
	1.8	3000~5000

T_{mB}：馬達最大輸出扭矩 /Motor Maximum output torque
η：減速機運轉效率 /Gearbox operating efficiency

⑤

$$n_{2a}=n_{2d}=\frac{1}{2}xn_{2c}$$

$$n_{2m}=\frac{n_{2a}xt_a+n_{2c}xt_c+n_{2d}xt_d}{T_a+t_c+t_d}$$

$$n_{2N}=\frac{n_{1N}}{i}$$

⑥

$$F_{2rm}=\sqrt[3]{\frac{n_{2a}xt_axF_{2ra}^3+n_{2c}xt_cxF_{2rc}^3+n_{2d}xt_dxF_{2rd}^3}{N_{2a}xt_a+n_{2c}xt_c+n_{2d}xt_d}}$$

$$F_{2am}=\sqrt[3]{\frac{n_{2a}xt_axF_{2aa}^3+n_{2c}xt_cxF_{2rc}^3+n_{2d}xt_dxT_{2ad}^3}{n_{2a}xt_a+n_{2c}xt_c+n_{2d}xt_d}}$$

GPV Series

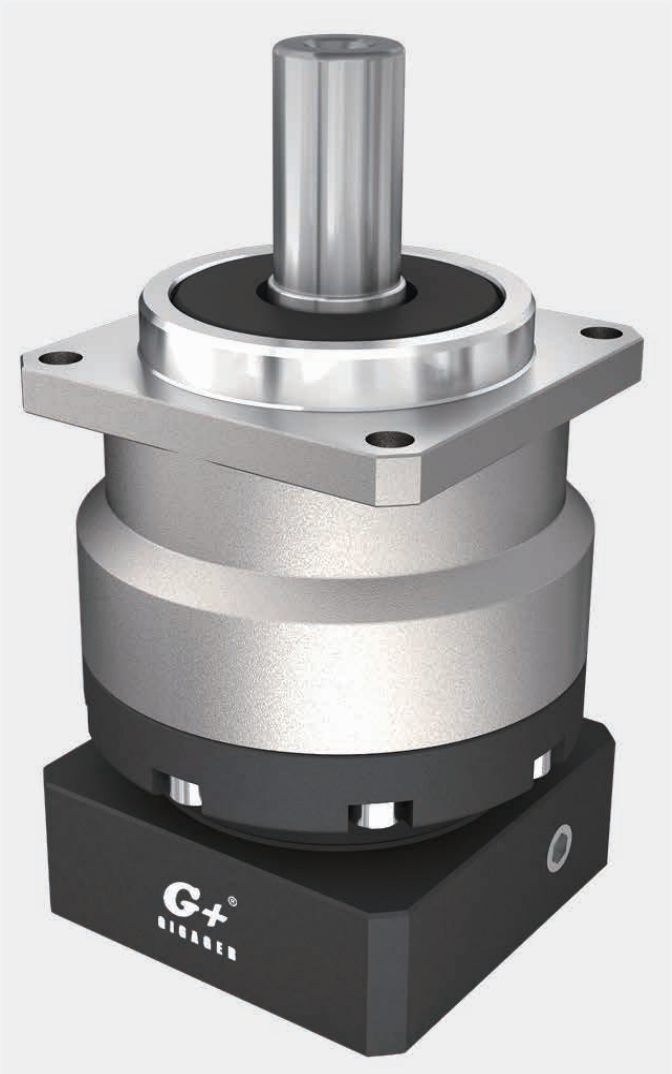

型號說明 / MODEL ILLUMINATE

GPV	060	-	10	-	S2	-	P2	/	
系列代碼 Series	規格 Size		減速比 Ratio		輸出軸形式 Output Shaft		精度 Precision		馬達型號 Motor Model

規格 Size
060
090
115
142
180
220

減速比 Ratio

單級
Single
(L1)
3
4
5
7
10

雙級
Double
(L2)
12
15
16
20
25
28
30
35
40
50
70
100

輸出軸形式 Output Shaft
S1：光軸輸出
S1：smooth
S2：帶鍵輸出
S2：with key

精度 Precision
P1 精密背隙
Precision backlash
P2 標準背隙
Standard backlash

馬達型號 Motor Model
由客戶提供馬達品牌及型號
Motor brand and model supplied by client

轉動慣量總表 / ROTATIONAL INERTIA OF REDUCER

規格 specification		級數 stage	減速比 Ratio	GPV060	GPV090	GPV115	GPV142	GPV180	GPV220
轉動慣量 J1 Rotational inertia J1	kg·cm²	1	3	0.22	1.2	5.3	20	44	90
			4	0.17	0.95	4.1	15	28	62
			5	0.16	0.86	3.6	14	22	52
			7	0.14	0.79	3.2	12	16	42
			10	0.14	0.75	3	11	14	38
		2	12	0.14	0.72	2.8	11	12	36
			15	0.14	0.72	2.8	11	12	36
			16	0.13	0.72	2.8	11	12	35
			20	0.13	0.72	2.8	11	12	35
			25	0.13	0.71	2.8	11	12	35
			28	0.13	0.7	2.7	10	11	34
			30	0.13	0.7	2.7	10	11	34
			35	0.13	0.7	2.7	11	12	35
			40	0.13	0.7	2.7	10	11	33
			50	0.13	0.69	2.7	10	11	33
			70	0.13	0.69	2.7	10	11	33
			100	0.13	0.69	2.7	10	11	33

減速機性能資料 /GEAR BOX PERFORMANCE INFORMATION

規格 specification		節數 stage	減速比 ratio	GPV060	GPV090	GPV115	GPV140	GPV180	GPV220
額定輸出力矩 T_{2N} Rated output torque T_{2N}	Nm	1	3	55	130	208	342	588	1140
			4	50	140	290	543	1050	1700
			5	60	160	330	650	1200	2000
			7	50	140	300	550	1100	1800
			10	40	100	230	450	900	1500
		2	12	55	130	208	342	588	1140
			15	55	130	208	342	588	1140
			16	50	140	290	543	1050	1700
			20	50	140	290	542	1050	1700
			25	60	160	330	650	1200	2000
			28	50	140	290	543	1050	1700
			30	55	150	310	600	1100	1900
			35	50	140	300	550	1100	1800
			40	45	120	260	500	1000	1600
			50	60	160	330	650	1200	2000
			70	50	140	300	550	1100	1800
			100	40	100	230	450	900	1500
急停扭矩 T_{2NOT} Emergency stop torque T_{2NOT}	Nm	1 &2	3 ~ 100	3 倍額定輸出力矩 /Triple rated output torque					
額定輸入转速 n_{1N} Rated input speed n_{1N}	rpm	1 &2	3 ~ 100	5000	4000	4000	3000	3000	2000
最大輸入轉速 n_{1B} Max input speed n_{1B}		1 &2	3 ~ 100	10000	8000	8000	6000	6000	4000
精密背隙 P1 Precision backlash P1	arcmin	1	3 ~ 10	≤ 3	≤ 3	≤ 3	≤ 3	≤ 3	≤ 3
		2	12 ~ 100	≤ 5	≤ 5	≤ 5	≤ 5	≤ 5	≤ 5
標準背隙 P2 Standard backlash P2	arcmin	1	3 ~ 10	≤ 5	≤ 5	≤ 5	≤ 5	≤ 5	≤ 5
		2	12 ~ 100	≤ 8	≤ 8	≤ 8	≤ 8	≤ 8	≤ 8
扭轉剛性 Torsional rigidity	Nm/arcmin	1 &2	3 ~ 100	7	14	25	50	145	225
容許徑向力 F_{2rB} Allowabie radial force F_{2rB}	N	1 &2	3 ~ 100	1530	3250	6700	9400	14500	50000
容許軸向力 F_{2aB} Allowabie axial force F_{2aB}	N	1 &2	3 ~ 100	765	1625	3350	4700	7250	25000
使用壽命 Lifespan	Hr	1 &2	3 ~ 100	20000					
效率 Efficiency	%	1	3 ~ 10	≥ 97%					
		2	12 ~ 100	≥ 94%					
重量 Weight	kg	1	3 ~ 10	1.4	3.7	8	16	36	53
		2	12 ~ 100	1.6	4.2	8.9	17	37	54
使用溫度 Working temperature	℃	1 &2	3 ~ 100	-10℃ ~ 90℃					
潤滑 Grease		1 &2	3 ~ 100	合成润滑油脂 /Synthetic ludricating grease					
防護等級 IP Grade		1 &2	3 ~ 100	IP65					
安裝方向 Installation direction		1 &2	3 ~ 100	任意方向 /Any direction					
噪音值 (n_1=3000rpm，无负载) Noise Value (n_1=3000rpm,off load)	Db	1 &2	3 ~ 100	≤ 58	≤ 60	≤ 63	≤ 65	≤ 67	≤ 70

■ GPV060-L1

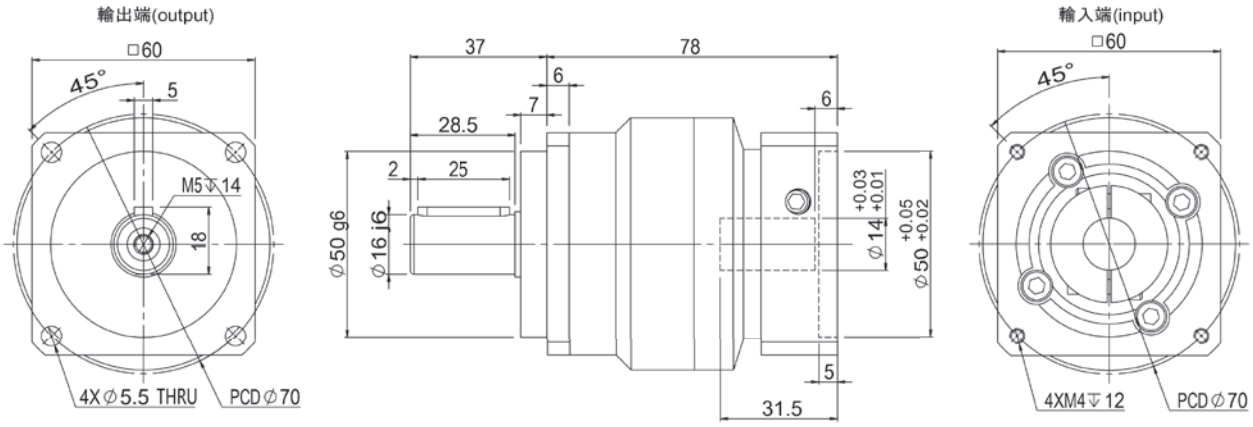

■ GPV060-L2

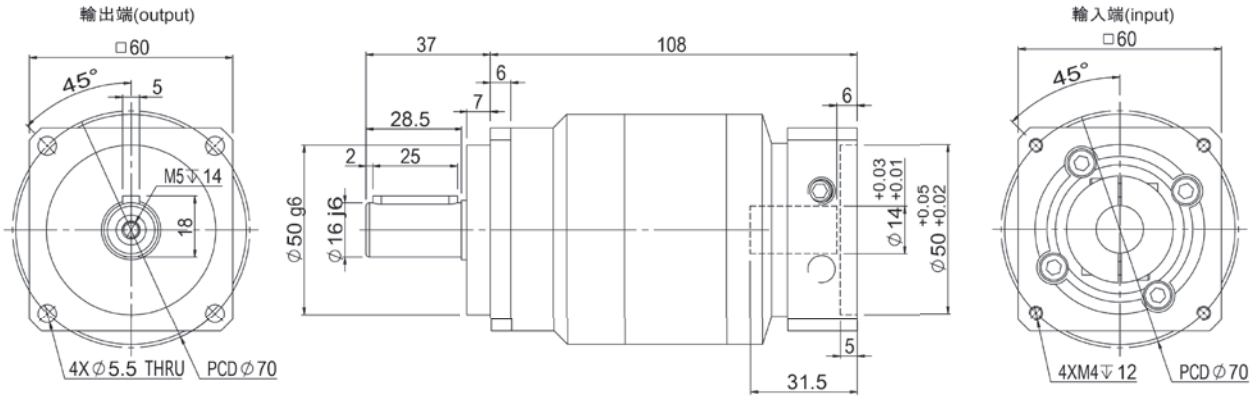

■ GPV090-L1

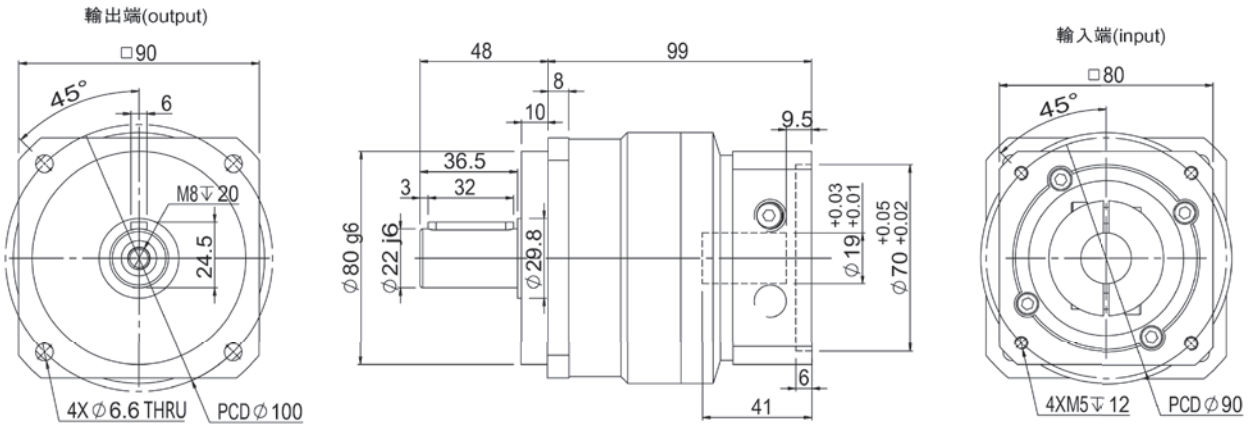

■ GPV090-L2

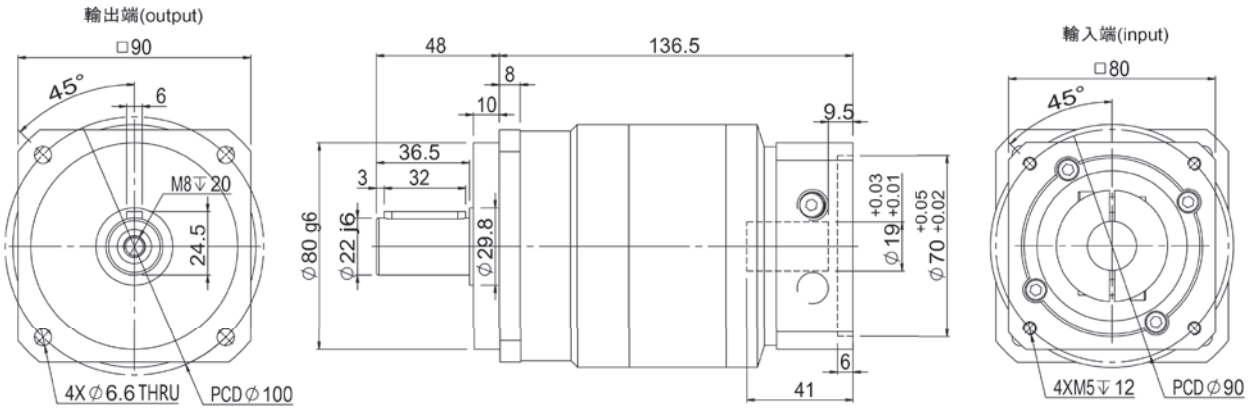

■ GPV115-L1

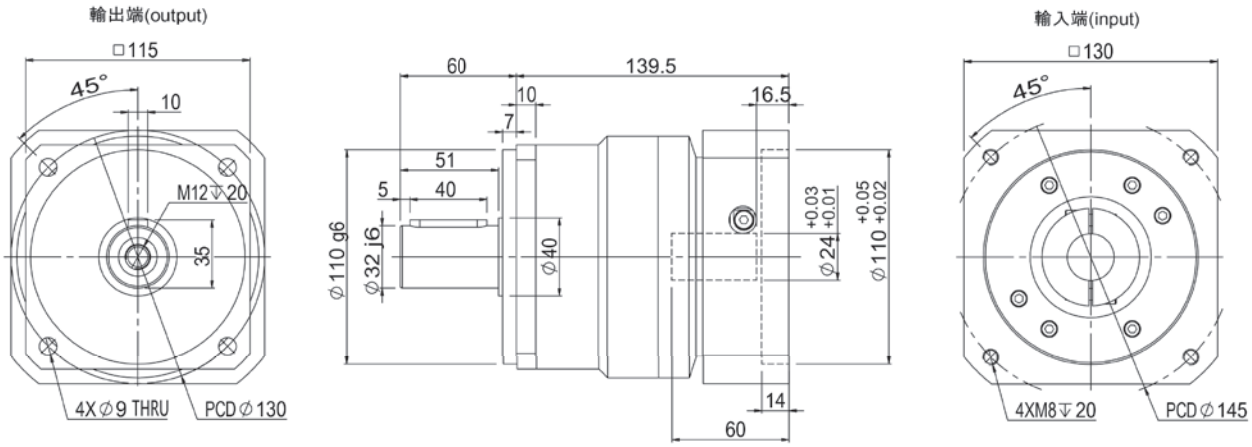

■ GPV115-L2

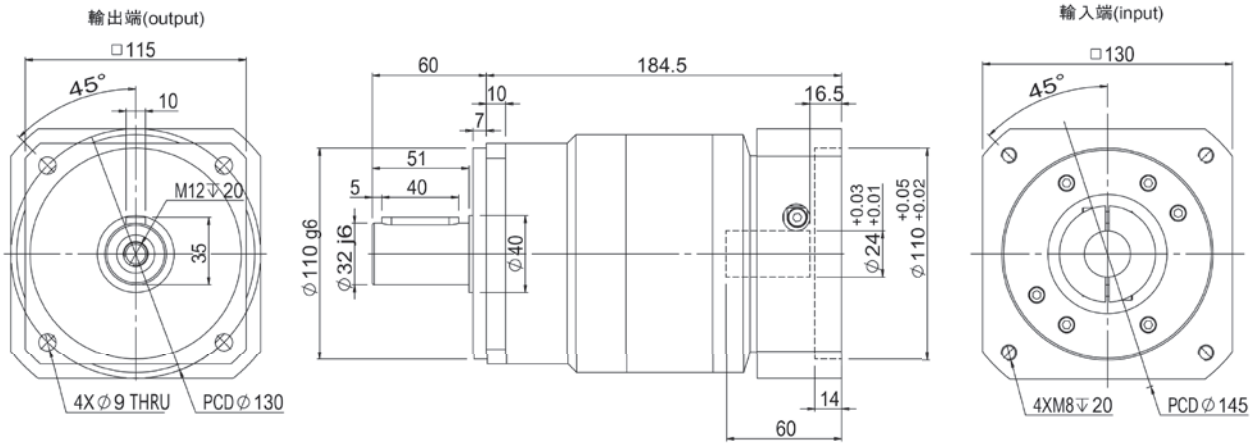

■ GPV140-L1

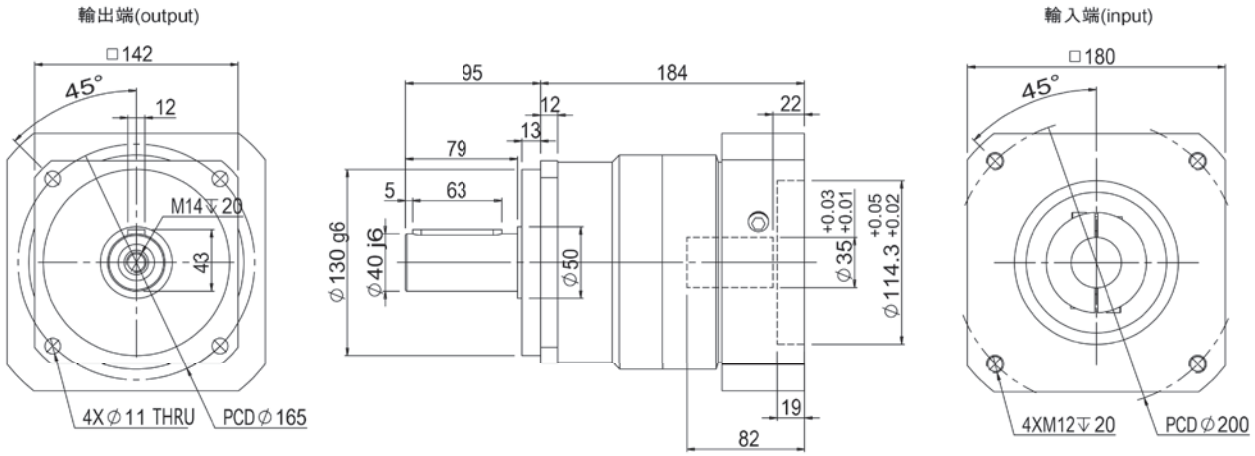

■ GPV140-L2

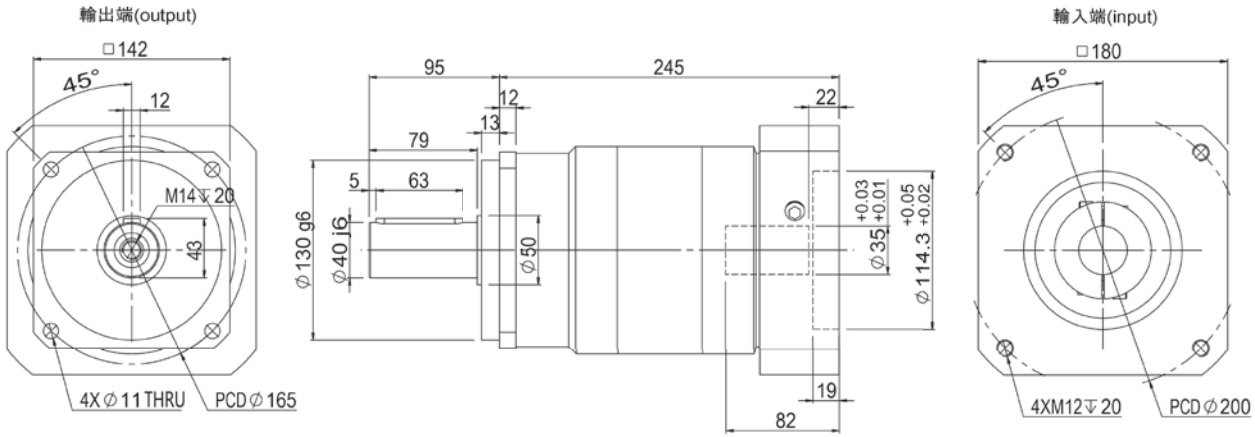

■ GPV180-L1

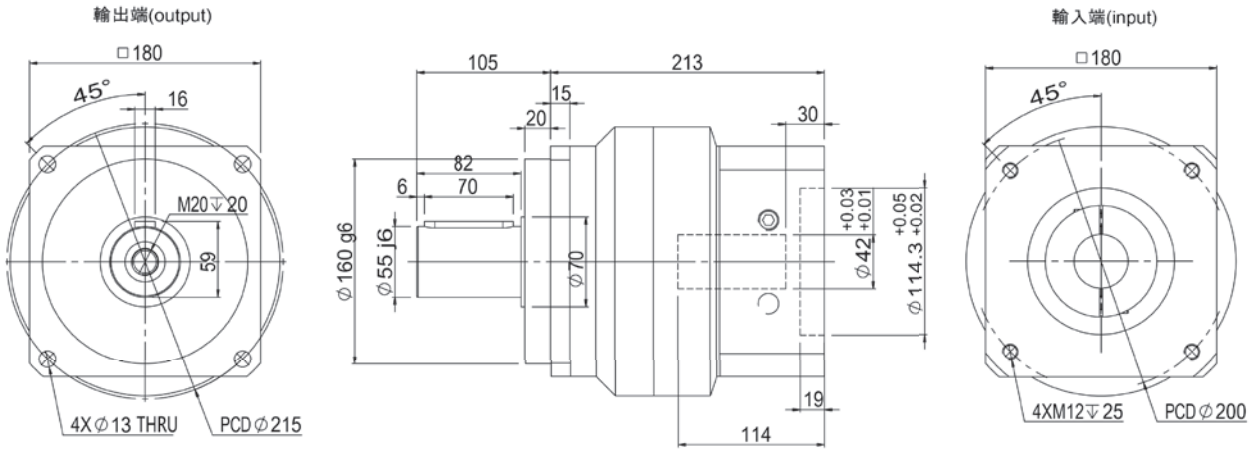
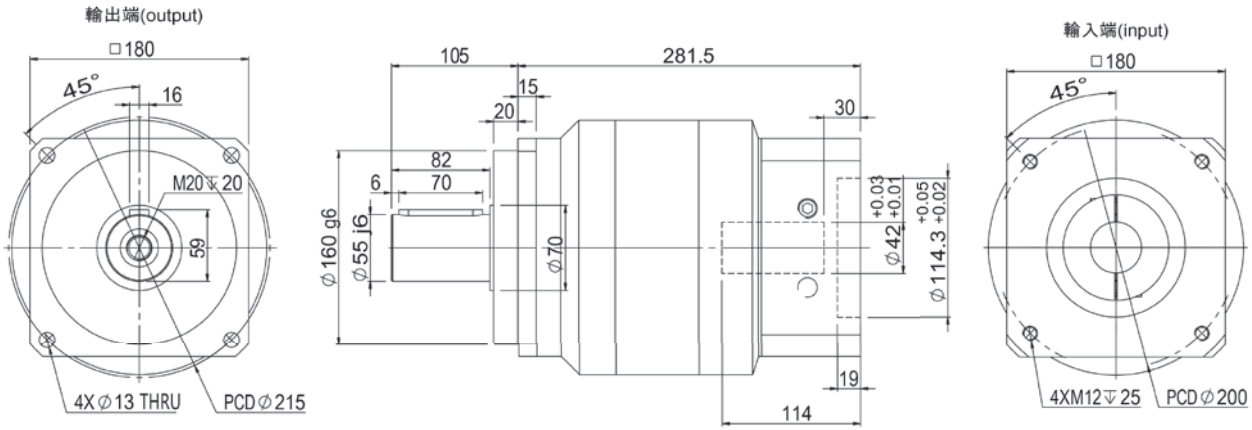
■ GPV180-L2