CHARACTERISTIC OF FLOODED RECHARGEABLE LEAD ACID BATTERY

MODEL: 6N2-2A-5 NO. 301020003-00006

Container Color
Cover:Black C
Bottom:White C

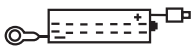

Plane Chart:

Unit:mm Terminal type:
(+) 150mmCB104 (-)150mmLA106

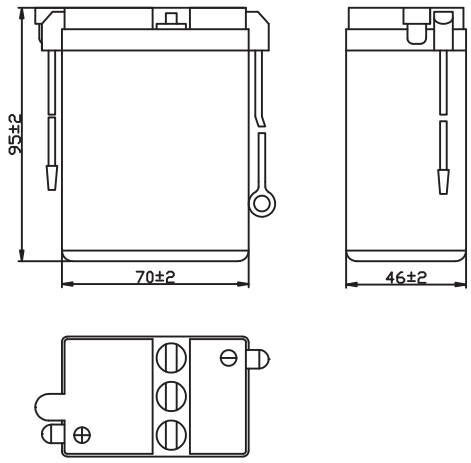

Parts:

Executed Standard JISD 5302 -2004

Cover	Container Bottom	Terminal	Positive Plate	Negative Plate	Separator	Electrolyte	Safty Valve	Explosion Plate	Way of Sealing
PP	PP	Pb	PbO_2	Pb	PE/ Compound Fibre	dilute sulphuric acid	Rubber	PP	Heat Sealing

Parameter Chart:

Volts	6V		
Capacity (25°C)	10 hours rate		2Ah
Appx.Dimension (mm)	L±2		70
	W±2		46
	H±2		95
Storage Status	Dry		
Weight (Approx)	0.37Kg	Weight w/ Acid	0.26Kg
Retention of Charge Storage @25 ℃			
1 month	97%	Directly Mounted	
3 month	90%	Directly Mounted	
6 month	80%	Constant Volts:7.2V Limit Current:0.4A Charging Hours:2-3H	
12 month	40%	Constant Volts:7.2V Limit Current:0.4A Charging Hours:4-6H	
CCA	**Factory Standard (-10° C)**	**Factory Standard (-18° C)**	
Discharging Current	–	–	

★The above are average and data obtained from the firsr 3 charge/discharge cycles.These are not minimum values.

★The different item No.of battery can be developed according to the customer's demand.

Discharge Current 25℃

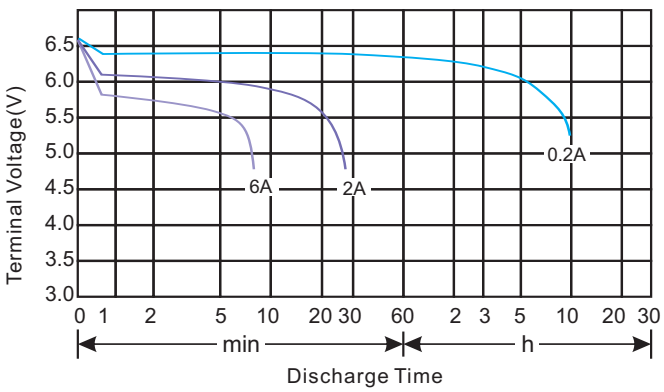

Residual Capacity

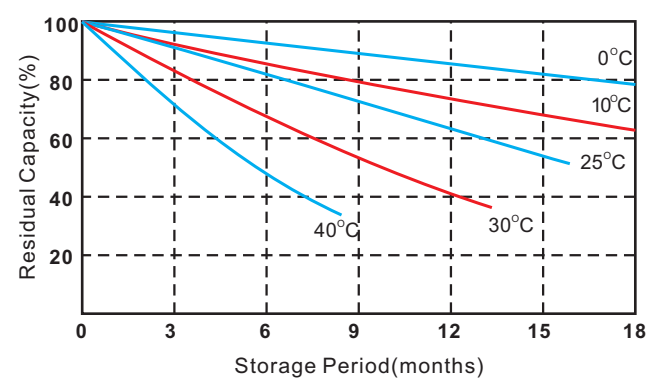

V20180601