C 系列铸造多级离心鼓风机性能参数

Performance Parameters of Series C Casting Multistage Centrifugal Blower

风机型号 Type of Blower	进气状态 Suction Condition				工作转速 Speed rpm	升压 Discharge Pressure kPa	轴功率 Axial Power kW	电机Motor			主机重量 Blower Weight kg	进口法兰 Inlet Flange DN (PN1.0MPa)	出口法兰 Outlet Flange DN (PN1.0MPa)
	流量 Capacity m^3/min	压力 Pressure kPa	温度 Tempe-rature ℃	密度 Density kg/m^3				型号 Type	功率 Power kW	重量 Weight kg			
C20-1.2Z	20	101.32	20	1.2	2980	19.6	9.3	Y160M-2	11	125	1520		
C20-1.3Z	20	101.32	20	1.2	2980	29.4	12.9	Y160L-2	18.5	150	1600		
C20-1.35Z	20	101.32	20	1.2	2980	34.5	14.9	Y160L-2	18.5	150	1740		
C20-1.4Z	20	101.32	20	1.2	2980	39.2	16.8	Y180M-2	22	180	1880		
C20-1.45Z	20	101.32	20	1.2	2980	44.1	18.6	Y180M-2	22	180	2000		
C20-1.5Z	20	101.32	20	1.2	2980	49.0	20.5	Y200L_1-2	30	240	2020		
C20-1.55Z	20	101.32	20	1.2	2980	53.9	22.3	Y200L_1-2	30	240	2140		
C20-1.6Z	20	101.32	20	1.2	2980	58.8	24.0	Y200L_1-2	30	240	2160		
C20-1.65Z	20	101.32	20	1.2	2980	63.7	25.8	Y200L_2-2	37	255	2280		
C20-1.7Z	20	101.32	20	1.2	2980	68.6	29.3	Y200L_2-2	37	255	2300		
C25-1.2Z	25	101.32	20	1.2	2980	19.6	11.6	Y160L-2	15	135	1520		
C25-1.3Z	25	101.32	20	1.2	2980	29.4	17.2	Y180M-2	22	180	1600		
C25-1.35Z	25	101.32	20	1.2	2980	34.5	19.8	Y200L_1-2	30	240	1740		
C25-1.4Z	25	101.32	20	1.2	2980	39.2	21.4	Y200L_1-2	30	240	1880		
C25-1.45Z	25	101.32	20	1.2	2980	44.1	24.8	Y200L_1-2	30	240	2000		
C25-1.5Z	25	101.32	20	1.2	2980	49.0	27.3	Y200L_2-2	37	255	2020		
C25-1.55Z	25	101.32	20	1.2	2980	53.9	29.7	Y200L_2-2	37	255	2140		
C25-1.6Z	25	101.32	20	1.2	2980	58.8	30.1	Y200L_2-2	37	255	2160	200	200
C25-1.65Z	25	101.32	20	1.2	2980	63.7	32.2	Y225M-2	45	309	2280		
C25-1.7Z	25	101.32	20	1.2	2980	68.6	34.3	Y225M-2	45	309	2300		
C30-1.2Z	30	101.32	20	1.2	2980	19.6	14.0	Y160L -2	18.5	150	1540		
C30-1.3Z	30	101.32	20	1.2	2980	29.4	20.1	Y200L_1-2	30	240	1630		
C30-1.35Z	30	101.32	20	1.2	2980	34.5	23.7	Y200L_1-2	30	240	1780		
C30-1.4Z	30	101.32	20	1.2	2980	39.2	26.5	Y200L_2-2	37	240	1930		
C30-1.45Z	30	101.32	20	1.2	2980	44.1	28.8	Y200L_2-2	37	255	2060		
C30-1.5Z	30	101.32	20	1.2	2980	49.0	32.7	Y225M-2	45	255	2110		
C30-1.55Z	30	101.32	20	1.2	2980	53.9	35.7	Y225M-2	45	309	2240		
C30-1.6Z	30	101.32	20	1.2	2980	58.8	40.6	Y250M-2	55	403	2270		
C30-1.65Z	30	101.32	20	1.2	2980	63.7	41.6	Y250M-2	55	403	2400		
C30-1.7Z	30	101.32	20	1.2	2980	68.6	44.4	Y250M-2	55	403	2430		
C35-1.2Z	35	101.32	20	1.2	2980	19.6	16.2	Y180M-2	22	180	1540		
C35-1.3Z	35	101.32	20	1.2	2980	29.4	24.0	Y200L_1-2	30	240	1630		
C35-1.35Z	35	101.32	20	1.2	2980	34.5	27.7	Y200L_2-2	37	255	1780		
C35-1.4Z	35	101.32	20	1.2	2980	39.2	31.2	Y200L_2-2	37	255	1930		
C35-1.45Z	35	101.32	20	1.2	2980	44.1	32.8	Y200L_2-2	37	255	2060		
C35-1.5Z	35	101.32	20	1.2	2980	49.0	38.2	Y225M-2	45	309	2110		

风机型号 Type of Blower	进气状态 Suction Condition				工作转速 Speed rpm	升压 Discharge Pressure kPa	轴功率 Axial Power kW	电机Motor			主机重量 Blower Weight kg	进口法兰 Inlet Flange DN (PN1.0MPa)	出口法兰 Outlet Flange DN (PN1.0MPa)
	流量 Capacity m^3/min	压力 Pressure kPa	温度 Tempe-rature ℃	密度 Density kg/m^3				型号 Type	功率 Power kW	重量 Weight kg			
C35-1.55Z	35	101.32	20	1.2	2980	53.9	41.5	Y225M-2	55	403	2240		
C35-1.6Z	35	101.32	20	1.2	2980	58.8	44.8	Y250M-2	55	403	2270		
C35-1.65Z	35	101.32	20	1.2	2980	63.7	48.0	Y250S-2	55	403	2400		
C35-1.7Z	35	101.32	20	1.2	2980	68.6	51.2	Y280S-2	75	544	2430		
C40-1.2Z	40	101.32	20	1.2	2980	19.6	18.7	Y180M-2	22	180	1620		
C40-1.3Z	40	101.32	20	1.2	2980	29.4	27.2	Y200L_2-2	37	255	1780		
C40-1.35Z	40	101.32	20	1.2	2980	34.5	29.7	Y200L_2-2	37	255	1940		
C40-1.4Z	40	101.32	20	1.2	2980	39.2	35.7	Y225M-2	45	309	2100		
C40-1.45Z	40	101.32	20	1.2	2980	44.1	37.3	Y225M-2	45	309	2150		
C40-1.5Z	40	101.32	20	1.2	2980	49.0	44.1	Y250M-2	55	403	2260		
C40-1.55Z	40	101.32	20	1.2	2980	53.9	47.9	Y250M-2	55	403	2420		
C40-1.6Z	40	101.32	20	1.2	2980	58.8	51.8	Y280S-2	75	544	2580		
C40-1.65Z	40	101.32	20	1.2	2980	63.7	56.6	Y280S-2	75	544	2740		
C40-1.7Z	40	101.32	20	1.2	2980	68.6	60.5	Y280S-2	75	544	2790		
C45-1.2Z	45	101.32	20	1.2	2980	19.6	21.4	Y200L1-2	30	240	1620		
C45-1.3Z	45	101.32	20	1.2	2980	29.4	30.9	Y200L_2-2	37	255	1780		
C45-1.35Z	45	101.32	20	1.2	2980	34.5	35.6	Y225M-2	45	309	1940		
C45-1.4Z	45	101.32	20	1.2	2980	39.2	40.2	Y250M-2	55	403	2100		
C45-1.45Z	45	101.32	20	1.2	2980	44.1	44.7	Y250M-2	55	403	2150		
C45-1.5Z	45	101.32	20	1.2	2980	49.0	49.1	Y250M-2	55	403	2260		
C45-1.55Z	45	101.32	20	1.2	2980	53.9	53.4	Y280S-2	75	544	2420		
C45-1.6Z	45	101.32	20	1.2	2980	58.8	57.7	Y280S-2	75	544	2580		
C45-1.65Z	45	101.32	20	1.2	2980	63.7	61.8	Y280S-2	75	544	2740	200	200
C45-1.7Z	45	101.32	20	1.2	2980	68.6	65.9	Y280S-2	75	544	2790		
C50-1.2Z	50	101.32	20	1.2	2980	19.6	23.6	Y200L1-2	30	240	1640		
C50-1.3Z	50	101.32	20	1.2	2980	29.4	34.3	Y225M-2	45	255	1800		
C50-1.35Z	50	101.32	20	1.2	2980	34.5	37.2	Y225M-2	45	309	1960		
C50-1.4Z	50	101.32	20	1.2	2980	39.2	45.1	Y250M-2	55	403	2120		
C50-1.45Z	50	101.32	20	1.2	2980	44.1	46.6	Y250M-2	55	403	2170		
C50-1.5Z	50	101.32	20	1.2	2980	49.0	55.2	Y280S-2	75	544	2280		
C50-1.55Z	50	101.32	20	1.2	2980	53.9	61.1	Y280S-2	75	544	2440		
C50-1.6Z	50	101.32	20	1.2	2980	58.8	66.3	Y280S-2	75	544	2600		
C50-1.65Z	50	101.32	20	1.2	2980	63.7	69.7	Y280M-2	90	620	2760		
C50-1.7Z	50	101.32	20	1.2	2980	68.6	74.6	Y280M-2	90	620	2810		
C55-1.2Z	55	101.32	20	1.2	2980	19.6	25.8	Y200L1-2	30	240	1650		
C55-1.3Z	55	101.32	20	1.2	2980	29.4	37.8	Y225M-2	45	309	1810		
C55-1.35Z	55	101.32	20	1.2	2980	34.5	43.5	Y250M-2	55	403	1970		
C55-1.4Z	55	101.32	20	1.2	2980	39.2	49.1	Y250M-2	55	403	2130		
C55-1.45Z	55	101.32	20	1.2	2980	44.1	54.6	Y280S-2	75	544	2180		
C55-1.5Z	55	101.32	20	1.2	2980	49.0	60.0	Y280S-2	75	544	2290		
C55-1.55Z	55	101.32	20	1.2	2980	53.9	65.3	Y280S-2	75	544	2450		
C55-1.6Z	55	101.32	20	1.2	2980	58.8	70.4	Y280M-2	90	620	2610		
C55-1.65Z	55	101.32	20	1.2	2980	63.7	75.5	Y280M-2	90	620	2770		
C55-1.7Z	55	101.32	20	1.2	2980	68.6	76.8	Y280M-2	90	620	2820		

风机型号 Type of Blower	进气状态 Suction Condition				工作转速 Speed rpm	升压 Discharge Pressure kPa	轴功率 Axial Power kW	电机Motor			主机重量 Blower Weight kg	进口法兰 Inlet Flange DN (PN1.0MPa)	出口法兰 Outlet Flange DN (PN1.0MPa)
	流量 Capacity m^3/min	压力 Pressure kPa	温度 Tempe-rature ℃	密度 Density kg/m^3				型号 Type	功率 Power kW	重量 Weight kg			
C60-1.2Z	60	101.32	20	1.2	2980	19.6	28.4	Y200L_2-2	37	255	1650	200	200
C60-1.3Z	60	101.32	20	1.2	2980	29.4	41.5	Y225M-2	45	309	1810		
C60-1.35Z	55	101.32	20	1.2	2980	34.5	47.5	Y250M-2	55	403	1970		
C60-1.4Z	60	101.32	20	1.2	2980	39.2	53.2	Y280S-2	75	544	2130		
C60-1.45Z	55	101.32	20	1.2	2980	44.1	59.8	Y280S-2	75	544	2180		
C60-1.5Z	60	101.32	20	1.2	2980	49.0	65.4	Y280S-2	75	544	2290		
C60-1.55Z	60	101.32	20	1.2	2980	53.9	70.4	Y280M-2	90	620	2450		
C60-1.6Z	60	101.32	20	1.2	2980	58.8	78.2	Y280M-2	90	620	2610		
C60-1.65Z	60	101.32	20	1.2	2980	63.7	83.9	Y315S-2	110	980	2770		
C60-1.7Z	60	101.32	20	1.2	2980	68.6	88.5	Y315S-2	110	980	2820		
C65-1.2Z	65	101.32	20	1.2	2980	19.6	30.8	Y200L_2-2	37	255	2000	250	250
C65-1.3Z	65	101.32	20	1.2	2980	29.4	44.5	Y250M-2	55	403	2350		
C65-1.4Z	65	101.32	20	1.2	2980	39.2	58.0	Y280S-2	75	544	2700		
C65-1.5Z	65	101.32	20	1.2	2980	49.0	70.8	Y280M-2	90	620	3060		
C65-1.55Z	65	101.32	20	1.2	2980	53.9	77.1	Y280M-2	90	620	3060		
C65-1.6Z	65	101.32	20	1.2	2980	58.8	83.2	Y315S-2	110	980	3410		
C65-1.65Z	65	101.32	20	1.2	2980	63.7	89.3	Y315S-2	110	980	3450		
C65-1.7Z	65	101.32	20	1.2	2980	68.6	95.2	Y315M_1-2	110	376	3760		
C65-1.75Z	65	101.32	20	1.2	2980	73.5	101.4	Y315M_1-2	132	1080	3790		
C65-1.8Z	65	101.32	20	1.2	2980	73.5	107.0	Y315M_1-2	132	1080	3820		
C65-1.9Z	65	101.32	20	1.2	2980	78.4	117.9	Y315M_1-2	132	1080	4110		
C70-1.2Z	70	101.32	20	1.2	2980	19.6	33.1	Y225M-2	45	309	2000		
C70-1.3Z	70	101.32	20	1.2	2980	29.4	48.0	Y250M-2	55	403	2350		
C70-1.4Z	70	101.32	20	1.2	2980	39.2	62.5	Y280S-2	75	544	2700		
C70-1.5Z	70	101.32	20	1.2	2980	49.0	76.4	Y280M-2	90	620	3060		
C70-1.55Z	70	101.32	20	1.2	2980	53.9	83.1	Y280M-2	90	620	3060		
C70-1.6Z	70	101.32	20	1.2	2980	58.8	89.7	Y315S-2	110	980	3410		
C70-1.65Z	70	101.32	20	1.2	2980	63.7	96.1	Y315S-2	110	980	3450		
C70-1.7Z	70	101.32	20	1.2	2980	68.6	102.5	Y315M_1-2	132	1080	3760		
C70-1.75Z	70	101.32	20	1.2	2980	73.5	108.7	Y315M_1-2	132	1080	3790		
C70-1.8Z	70	101.32	20	1.2	2980	78.4	114.8	Y315M1_1-2	132	1080	3820		
C70-1.9Z	70	101.32	20	1.2	2980	88.2	127.0	Y315L1_1-2	160	1160	4110		
C75-1.2Z	75	101.32	20	1.2	2980	19.6	35.4	Y225M-2	45	309	2000		
C75-1.3Z	75	101.32	20	1.2	2980	29.4	51.4	Y280S-2	75	544	2350		
C75-1.4Z	75	101.32	20	1.2	2980	39.2	67.0	Y280M-2	90	620	2700		
C75-1.5Z	75	101.32	20	1.2	2980	49.0	82.0	Y315S-2	110	980	3060		
C75-1.55Z	75	101.32	20	1.2	2980	53.9	89.0	Y315S-2	110	980	3060		
C75-1.6Z	75	101.32	20	1.2	2980	58.8	96.3	Y315S-2	110	980	3410		
C75-1.65Z	75	101.32	20	1.2	2980	63.7	103.2	Y315M_1-2	132	1080	3450		
C75-1.7Z	75	101.32	20	1.2	2980	68.6	110.0	Y315M_1-2	132	1080	3760		

风机型号 Type of Blower	进气状态 Suction Condition				工作转速 Speed rpm	升压 Discharge Pressure kPa	轴功率 Axial Power kW	电机Motor			主机重量 Blower Weight kg	进口法兰 Inlet Flange DN (PN1.0MPa)	出口法兰 Outlet Flange DN (PN1.0MPa)
	流量 Capacity m^3/min	压力 Pressure kPa	温度 Tempe-rature ℃	密度 Density kg/m^3				型号 Type	功率 Power kW	重量 Weight kg			
C75-1.75Z	75	101.32	20	1.2	2980	73.5	116.7	Y315M_1-2	132	1080	3790	250	250
C75-1.8Z	75	101.32	20	1.2	2980	78.4	123.0	Y315L1_1-2	160	1160	3820		
C75-1.9Z	75	101.32	20	1.2	2980	88.2	136.0	Y315L1_1-2	160	1160	4110		
C80-1.3Z	80	101.32	20	1.2	2980	29.4	54.9	Y280S-2	75	544	2650	300	250
C80-1.4Z	80	101.32	20	1.2	2980	39.2	71.5	Y280M-2	90	620	2860		
C80-1.5Z	80	101.32	20	1.2	2980	49.0	87.2	Y315S-2	110	980	3270		
C80-1.55Z	80	101.32	20	1.2	2980	53.9	95.0	Y315S-2	110	980	3280		
C80-1.6Z	80	101.32	20	1.2	2980	58.8	102.5	Y315M_1-2	132	1080	3290		
C80-1.65Z	80	101.32	20	1.2	2980	63.7	109.9	Y315M_1-2	132	1080	3640		
C80-1.7Z	80	101.32	20	1.2	2980	68.6	111.6	Y315M_1-2	132	1080	3650		
C80-1.75Z	80	101.32	20	1.2	2980	73.5	124.2	Y315L_1-2	160	1160	3670		
C80-1.8Z	80	101.32	20	1.2	2980	78.4	131.1	Y315L_1-2	160	1160	4100		
C80-1.9Z	80	101.32	20	1.2	2980	88.2	142.5	Y315L_2-2	185	1220	4120		
C80-2.0Z	80	101.32	20	1.2	2980	98.0	155.6	Y315L_2-2	200	1220	4600		
C90-1.3Z	90	101.32	20	1.2	2980	29.4	61.8	Y280S-2	75	544	2660		
C90-1.4Z	90	101.32	20	1.2	2980	39.2	80.4	Y280M-2	90	620	2870		
C90-1.5Z	90	101.32	20	1.2	2980	49.0	98.2	Y315S-2	110	980	3280		
C90-1.55Z	90	101.32	20	1.2	2980	53.9	106.8	Y315M_1-2	132	1080	3290		
C90-1.6Z	90	101.32	20	1.2	2980	58.8	115.2	Y315M_1-2	132	1080	3300		
C90-1.65Z	90	101.32	20	1.2	2980	63.7	123.7	Y315L_1-2	160	1160	3650		
C90-1.7Z	90	101.32	20	1.2	2980	68.6	131.7	Y315L_1-2	160	1160	3660		
C90-1.75Z	90	101.32	20	1.2	2980	73.5	139.7	Y315L_1-2	160	1160	3680		
C90-1.8Z	90	101.32	20	1.2	2980	78.4	147.6	Y315L_2-2	185	1220	4110		
C90-1.9Z	90	101.32	20	1.2	2980	88.2	160.6	Y315L_2-2	200	1220	4120		
C90-2.0Z	90	101.32	20	1.2	2980	98.0	174.9	Y355M_1-2	220	1650	4610		
C100-1.3Z	100	101.32	20	1.2	2980	29.4	68.6	Y280M-2	90	620	2670		
C100-1.4Z	100	101.32	20	1.2	2980	39.2	89.3	Y315S-2	110	980	2880		
C100-1.5Z	100	101.32	20	1.2	2980	49.0	109.1	Y315M_1-2	132	1080	3290		
C100-1.55Z	100	101.32	20	1.2	2980	53.9	118.6	Y315L_1-2	160	1160	3300		
C100-1.6Z	100	101.32	20	1.2	2980	58.8	128.1	Y315L_1-2	160	1160	3310		
C100-1.65Z	100	101.32	20	1.2	2980	63.7	137.2	Y315L_1-2	160	1160	3660		
C100-1.7Z	100	101.32	20	1.2	2980	68.6	146.3	Y315L_2-2	185	1220	3670		
C100-1.75Z	100	101.32	20	1.2	2980	73.5	155.3	Y315L_2-2	200	1220	3690		
C100-1.8Z	100	101.32	20	1.2	2980	78.4	164.0	Y315L_2-2	200	1220	4120		
C100-1.9Z	100	101.32	20	1.2	2980	88.2	178.2	Y355M_1-2	220	1650	4130		
C100-2.0Z	100	101.32	20	1.2	2980	98.0	194.4	Y355M_2-2	250	1760	4620		
C110-1.3Z	110	101.32	20	1.2	2980	29.4	75.5	Y280M-2	90	620	2670		
C110-1.4Z	110	101.32	20	1.2	2980	39.2	95.3	Y315M_1-2	110	1080	2880		
C110-1.5Z	110	101.32	20	1.2	2980	49.0	118.0	Y315L_1-2	160	1160	3290		
C110-1.55Z	110	101.32	20	1.2	2980	53.9	128.6	Y315L_1-2	160	1160	3300		
C110-1.6Z	110	101.32	20	1.2	2980	58.8	138.8	Y315L_1-2	160	1160	3310		
C110-1.65Z	110	101.32	20	1.2	2980	63.7	151.0	Y315L_2-2	185	1220	3660		

风机型号 Type of Blower	进气状态 Suction Condition				工作转速 Speed rpm	升压 Discharge Pressure kPa	轴功率 Axial Power kW	电机Motor			主机重量 Blower Weight kg	进口法兰 Inlet Flange DN (PN1.0MPa)	出口法兰 Outlet Flange DN (PN1.0MPa)
	流量 Capacity m^3/min	压力 Pressure kPa	温度 Tempe-rature ℃	密度 Density kg/m^3				型号 Type	功率 Power kW	重量 Weight kg			
C110-1.7Z	110	101.32	20	1.2	2980	68.6	161.0	Y315L_2-2	200	1220	3670		
C110-1.75Z	110	101.32	20	1.2	2980	73.5	170.7	Y315L_2-2	200	1220	3690		
C110-1.8Z	110	101.32	20	1.2	2980	78.4	180.5	Y355M_1-2	220	1650	4120		
C110-1.9Z	110	101.32	20	1.2	2980	88.2	195.9	Y355M_2-2	250	1760	4130		
C110-2.0Z	110	101.32	20	1.2	2980	98.0	213.7	Y355M_2-2	250	1760	4620		
C120-1.3Z	120	101.32	20	1.2	2980	29.4	75.3	Y280M-2	90	620	2680		
C120-1.4Z	120	101.32	20	1.2	2980	39.2	102.7	Y315M_1-2	132	1080	2890		
C120-1.5Z	120	101.32	20	1.2	2980	49.0	119.5	Y315L_1-2	160	1160	3300		
C120-1.55Z	120	101.32	20	1.2	2980	53.9	128.5	Y315L_1-2	160	1160	3310		
C120-1.6Z	120	101.32	20	1.2	2980	58.8	140.1	Y315L_2-2	185	1220	3320		
C120-1.65Z	120	101.32	20	1.2	2980	63.7	150.1	Y315L_2-2	185	1220	3670		
C120-1.7Z	120	101.32	20	1.2	2980	68.6	167.0	Y315L_2-2	200	1220	3680		
C120-1.75Z	120	101.32	20	1.2	2980	73.5	177.6	Y355M_1-2	220	1650	3700		
C120-1.8Z	120	101.32	20	1.2	2980	78.4	187.1	Y355M_1-2	220	1650	4130		
C120-1.9Z	120	101.32	20	1.2	2980	88.2	203.5	Y355M_2-2	250	1760	4140	300	250
C120-2.0Z	120	101.32	20	1.2	2980	98.0	233.4	Y355L1-2	280	1830	4630		
C130-1.3Z	130	101.32	20	1.2	2980	29.4	81.6	Y315S-2	110	980	2650		
C130-1.4Z	130	101.32	20	1.2	2980	39.2	106.0	Y315M-2	132	1080	3200		
C130-1.45Z	130	101.32	20	1.2	2980	44.1	117.9	Y315L1-2	160	1160	3250		
C130-1.5Z	130	101.32	20	1.2	2980	49.0	129.4	Y315L1-2	160	1160	3700		
C130-1.55Z	130	101.32	20	1.2	2980	53.9	140.7	Y315L2-2	185	1220	3750		
C130-1.6Z	130	101.32	20	1.2	2980	58.8	158.8	Y315L2-2	185	1220	3780		
C130-1.65Z	130	101.32	20	1.2	2980	63.7	170.7	Y355M1-2	220	1650	3800		
C130-1.7Z	130	101.32	20	1.2	2980	68.6	181.7	Y355M1-2	220	1650	4350		
C130-1.75Z	130	101.32	20	1.2	2980	73.5	192.8	Y355M1-2	250	1760	4400		
C130-1.8Z	130	101.32	20	1.2	2980	78.4	203.0	Y355M-2	250	1760	5200		
C130-1.9Z	130	101.32	20	1.2	2980	88.2	220.6	Y355L1-2	280	1830	5250		
C130-2.0Z	130	101.32	20	1.2	2980	98.0	252.5	Y355L2-2	315	1900	5850		
C140-1.3Z	140	101.32	20	1.2	2980	29.4	87.9	Y315S1-2	110	980	2700		
C140-1.35Z	140	101.32	20	1.2	2980	34.3	101.1	Y315M1-2	132	1080	2750		
C140-1.4Z	140	101.32	20	1.2	2980	39.2	114.2	Y315L1-2	160	1160	3250		
C140-1.45Z	140	101.32	20	1.2	2980	44.1	126.9	Y315L1-2	160	1160	3300		
C140-1.5Z	140	101.32	20	1.2	2980	49.0	145.3	Y315L2-2	185	1220	3750		
C140-1.55Z	140	101.32	20	1.2	2980	53.9	151.5	Y315L2-2	185	1220	3780		
C140-1.6Z	140	101.32	20	1.2	2980	58.8	163.5	Y315L2-2	200	1220	3800	350	300
C140-1.65Z	140	101.32	20	1.2	2980	63.7	175.1	Y355M1-2	220	1650	3820		
C140-1.7Z	140	101.32	20	1.2	2980	68.6	186.6	Y355M2-2	220	1650	4400		
C140-1.75Z	140	101.32	20	1.2	2980	73.5	197.9	Y355M-2	250	1760	4430		
C140-1.8Z	140	101.32	20	1.2	2980	78.4	209.0	Y355M-2	250	1760	5250		
C140-1.9Z	140	101.32	20	1.2	2980	88.2	237.6	Y355L1-2	280	1830	5300		
C140-2.0Z	140	101.32	20	1.2	2980	98.0	272.0	Y355L2-2	315	1900	5900		

风机型号 Type of Blower	进气状态 Suction Condition				工作转速 Speed rpm	升压 Discharge Pressure kPa	轴功率 Axial Power kW	电机Motor			主机重量 Blower Weight kg	进口法兰 Inlet Flange DN (PN1.0MPa)	出口法兰 Outlet Flange DN (PN1.0MPa)
	流量 Capacity m^3/min	压力 Pressure kPa	温度 Tempe-rature ℃	密度 Density kg/m^3				型号 Type	功率 Power kW	重量 Weight kg			
C150-1.3Z	150	101.32	20	1.2	2980	29.4	94.1	Y315S1-2	110	980	2750		
C150-1.35Z	150	101.32	20	1.2	2980	34.3	108.4	Y315M1-2	132	1080	2800		
C150-1.4Z	150	101.32	20	1.2	2980	39.2	122.3	Y315L1-2	160	1160	3280		
C150-1.45Z	150	101.32	20	1.2	2980	44.1	136.0	Y315L1-2	160	1160	3320		
C150-1.5Z	150	101.32	20	1.2	2980	49.0	142.3	Y315L2-2	185	1220	3780		
C150-1.55Z	150	101.32	20	1.2	2980	53.9	162.4	Y315L2-2	200	1220	3820		
C150-1.6Z	150	101.32	20	1.2	2980	58.8	175.1	Y355M-2	220	1650	3820		
C150-1.75Z	150	101.32	20	1.2	2980	73.5	212.1	Y355L1-2	280	1830	4460		
C150-1.8Z	150	101.32	20	1.2	2980	78.4	223.9	Y355L1-2	280	1830	5260		
C150-1.9Z	150	101.32	20	1.2	2980	88.2	254.6	Y355L2-2	315	1900	5320		
C150-2.0Z	150	101.32	20	1.2	2980	98.0	291.5	YKK400-2	355	2580	5950		
C160-1.3Z	160	101.32	20	1.2	2980	29.4	100.3	Y315M1-2	132	1080	2800		
C160-1.35Z	160	101.32	20	1.2	2980	34.3	115.6	Y315L1-2	160	1160	2850		
C160-1.4Z	160	101.32	20	1.2	2980	39.2	130.5	Y315L_1-2	160	1160	3300		
C160-1.45Z	160	101.32	20	1.2	2980	44.1	145.0	Y315L_2-2	185	1220	3350		
C160-1.5Z	160	101.32	20	1.2	2980	49.0	159.2	Y315L_2-2	200	1220	3800		
C160-1.55Z	160	101.32	20	1.2	2980	53.9	173.1	Y355M_1-2	220	1650	3850		
C160-1.6Z	160	101.32	20	1.2	2980	58.8	186.8	Y355M_1-2	220	1650	3880		
C160-1.65Z	160	101.32	20	1.2	2980	63.7	200.1	Y355M-2	250	1760	3900		
C160-1.7Z	160	101.32	20	1.2	2980	68.6	213.3	Y355L_1-2	280	1830	4450		
C160-1.75Z	160	101.32	20	1.2	2980	73.5	226.3	Y355L_1-2	280	1830	4480		
C160-1.8Z	160	101.32	20	1.2	2980	78.4	238.9	Y355L_2-2	315	1900	5300	350	300
C160-1.9Z	160	101.32	20	1.2	2980	88.2	271.6	Y355L_2-2	315	1900	5350		
C160-2.0Z	160	101.32	20	1.2	2980	98.0	296.2	YKK400-2	355	2580	5980		
C180-1.3Z	180	101.32	20	1.2	2980	29.4	113.0	Y315L_1-2	160	1160	2850		
C180-1.35Z	180	101.32	20	1.2	2980	34.3	130.0	Y315L_1-2	160	1160	2900		
C180-1.4Z	180	101.32	20	1.2	2980	39.2	146.8	Y315L_2-2	185	1220	3400		
C180-1.45Z	180	101.32	20	1.2	2980	44.1	163.1	Y315L_2-2	200	1220	3450		
C180-1.5Z	180	101.32	20	1.2	2980	49.0	179.1	Y355M_1-2	220	1650	3900		
C180-1.55Z	180	101.32	20	1.2	2980	53.9	194.8	Y355M-2	250	1760	3950		
C180-1.6Z	180	101.32	20	1.2	2980	58.8	210.2	Y355M-2	250	1760	3980		
C180-1.65Z	180	101.32	20	1.2	2980	63.7	225.2	Y355L_1-2	280	1830	4020		
C180-1.7Z	180	101.32	20	1.2	2980	68.6	240.0	Y355L_1-2	280	1830	4550		
C180-1.75Z	180	101.32	20	1.2	2980	73.5	254.5	Y355L_2-2	315	1900	4580		
C180-1.8Z	180	101.32	20	1.2	2980	78.4	268.7	Y355L_2-2	315	1900	5250		
C180-1.9Z	180	101.32	20	1.2	2980	78.4	305.5	YKK400-2*	355	2580	5300		
C180-2.0Z	180	101.32	20	1.2	2980	98.0	333.2	YKK400-2*	400	2580	6050		
C200-1.3Z	200	101.32	20	1.2	2980	29.4	125.5	Y315L_1-2	160	1160	2850		
C200-1.35Z	200	101.32	20	1.2	2980	34.3	144.5	Y315L_2-2	185	1220	2900		
C200-1.4Z	200	101.32	20	1.2	2980	39.2	163.1	Y315L_2-2	200	1220	3450		
C200-1.45Z	200	101.32	20	1.2	2980	44.1	181.2	Y355M_1-2	220	1650	3500		
C200-1.5Z	200	101.32	20	1.2	2980	49.0	199.1	Y355M_2-2	250	1760	3950		
C200-1.55Z	200	101.32	20	1.2	2980	53.9	216.4	Y355L_1-2	280	1830	4000		

风机型号 Type of Blower	进气状态 Suction Condition				工作转速 Speed rpm	升压 Discharge Pressure kPa	轴功率 Axial Power kW	电机Motor			主机重量 Blower Weight kg	进口法兰 Inlet Flange DN (PN1.0MPa)	出口法兰 Outlet Flange DN (PN1.0MPa)
	流量 Capacity m^3/min	压力 Pressure kPa	温度 Tempe-rature ℃	密度 Density kg/m^3				型号 Type	功率 Power kW	重量 Weight kg			
C200-1.6Z	200	101.32	20	1.2	2980	58.8	231.3	Y355L_1-2	280	1830	4050	350	300
C200-1.65Z	200	101.32	20	1.2	2980	63.7	250.2	Y355L_2-2	315	1900	4080		
C200-1.7Z	200	101.32	20	1.2	2980	68.6	266.6	Y355L_2-2	315	1900	4600		
C200-1.75Z	200	101.32	20	1.2	2980	73.5	282.8	YKK400-2*	355	2580	4750		
C200-1.8Z	200	101.32	20	1.2	2980	78.4	298.5	YKK400-2*	355	2580	5300	400	400
C200-1.9Z	200	101.32	20	1.2	2980	88.2	339.5	YKK400-2*	400	2580	5350		
C200-2.0Z	200	101.32	20	1.2	2980	98.0	370.3	YKK400-2*	450	2680	6100		
C220-1.3Z	220	101.32	20	1.2	2980	29.4	147.2	Y315L_2-2	185	1220	3250		
C220-1.4Z	220	101.32	20	1.2	2980	39.2	193.6	Y355M_1-2	220	1650	4050		
C220-1.5Z	220	101.32	20	1.2	2980	49.0	236.5	Y355L_1-2	280	1830	4800		
C220-1.6Z	220	101.32	20	1.2	2980	58.8	277.6	Y355L_2-2	315	1900	5650		
C220-1.7Z	220	101.32	20	1.2	2980	68.6	317.0	YKK400-2*	355	2580	5700		
C220-1.8Z	220	101.32	20	1.2	2980	78.4	355.2	YKK400-2*	400	2580	5750		
C220-1.9Z	220	101.32	20	1.2	2980	88.2	392.1	YKK400-2*	450	2680	6400		
C220-2.0Z	220	101.32	20	1.2	2980	98.0	427.6	YKK400-2*	500	2780	6450		
C250-1.3Z	250	101.32	20	1.2	2980	29.4	167.8	Y315L_2-2	200	1220	3250		
C250-1.4Z	250	101.32	20	1.2	2980	39.2	213.8	Y355M_2-2	250	1760	4050		
C250-1.5Z	250	101.32	20	1.2	2980	49.0	261.0	Y355L_2-2	315	1900	4800		
C250-1.6Z	250	101.32	20	1.2	2980	58.8	306.2	YKK400-2*	355	2580	5650		
C250-1.7Z	250	101.32	20	1.2	2980	68.6	355.0	YKK400-2*	400	2580	5700		
C250-1.8Z	250	101.32	20	1.2	2980	78.4	391.6	YKK400-2*	450	2680	5750		
C250-1.9Z	250	101.32	20	1.2	2980	88.2	432.0	YKK400-2*	500	2780	6400		
C250-2.0Z	250	101.32	20	1.2	2980	98.0	471.4	YKK450-2*	560	3880	6450		
C300-1.3Z	300	101.32	20	1.2	2980	29.4	195.2	Y355M_2-2	250	1760	4950	500	400
C300-1.4Z	300	101.32	20	1.2	2980	39.2	256.6	Y355L_2-2	315	1900	6150		
C300-1.5Z	300	101.32	20	1.2	2980	49.0	313.2	YKK400-2*	355	2580	7300		
C300-1.6Z	300	101.32	20	1.2	2980	58.8	367.4	YKK400-2*	450	2680	7350		
C300-1.7Z	300	101.32	20	1.2	2980	68.6	401.8	YKK400-2*	500	2780	8450		
C300-1.8Z	300	101.32	20	1.2	2980	78.4	449.8	YKK450-2*	560	3880	8500		
C300-1.9Z	300	101.32	20	1.2	2980	88.2	496.1	YKK450-2*	560	3880	8550		
C300-2.0Z	300	101.32	20	1.2	2980	98.0	540.8	YKK450-2*	630	3980	9700		
C350-1.3Z	350	101.32	20	1.2	2980	29.4	228.1	Y355L_1-2	280	1830	4950		
C350-1.4Z	350	101.32	20	1.2	2980	39.2	287.1	YKK400-2*	355	2580	6150		
C350-1.5Z	350	101.32	20	1.2	2980	49.0	350.2	YKK400-2*	400	2580	7300		
C350-1.6Z	350	101.32	20	1.2	2980	58.8	410.8	YKK400-2*	500	2780	7350		
C350-1.7Z	350	101.32	20	1.2	2980	68.6	468.9	YKK450-2*	560	3880	8450		
C350-1.8Z	350	101.32	20	1.2	2980	78.4	524.7	YKK450-2*	630	3980	8500		
C350-1.9Z	350	101.32	20	1.2	2980	88.2	578.6	YKK450-2*	710	4100	8550		
C350-2.0Z	350	101.32	20	1.2	2980	98.0	630.9	YKK450-2*	710	4100	9700		

风机型号 Type of Blower	进气状态 Suction Condition				工作转速 Speed rpm	升压 Discharge Pressure kPa	轴功率 Axial Power kW	电机Motor			主机重量 Blower Weight kg	进口法兰 Inlet Flange DN (PN1.0MPa)	出口法兰 Outlet Flange DN (PN1.0MPa)
	流量 Capacity m^3/min	压力 Pressure kPa	温度 Tempe-rature ℃	密度 Density kg/m^3				型号 Type	功率 Power kW	重量 Weight kg			
C400-1.3Z	400	101.32	20	1.2	2980	29.4	260.0	Y355L_2-2	315	1900	4950	600	500
C400-1.4Z	400	101.32	20	1.2	2980	39.2	328.0	YKK400-2*	400	2580	6150		
C400-1.5Z	400	101.32	20	1.2	2980	49.0	400.2	YKK400-2*	500	2780	7300		
C400-1.6Z	400	101.32	20	1.2	2980	58.8	469.5	YKK450-2*	560	3880	7350		
C400-1.7Z	400	101.32	20	1.2	2980	68.6	535.9	YKK450-2*	630	3980	8450		
C400-1.8Z	400	101.32	20	1.2	2980	78.4	599.7	YKK450-2*	710	4100	8500		
C400-1.9Z	400	101.32	20	1.2	2980	88.2	661.4	YKK450-2*	800	4250	8550		
C400-2.0Z	400	101.32	20	1.2	2980	98.0	721.1	YKK500-2*	900	5200	9700		
C450-1.3Z	450	101.32	20	1.2	2980	29.4	287.2	YKK400-2*	355	2580	4950		
C450-1.4Z	450	101.32	20	1.2	2980	39.2	369.1	YKK400-2*	450	2680	6150		
C450-1.5Z	450	101.32	20	1.2	2980	49.0	450.2	YKK450-2*	560	3880	7300		
C450-1.6Z	450	101.32	20	1.2	2980	58.8	528.0	YKK450-2*	630	3980	7350		
C450-1.7Z	450	101.32	20	1.2	2980	68.6	602.8	YKK450-2*	710	4100	8450		
C450-1.8Z	450	101.32	20	1.2	2980	78.4	674.7	YKK450-2*	800	4250	8500		
C450-1.9Z	450	101.32	20	1.2	2980	88.2	744.1	YKK500-2*	900	5200	8550		
C450-2.0Z	450	101.32	20	1.2	2980	98.0	811.1	YKK500-2*	1000	5440	9700		
C500-1.3Z	500	101.32	20	1.2	2980	29.4	318.8	YKK400-2*	400	2580	5000		
C500-1.4Z	500	101.32	20	1.2	2980	39.2	410.1	YKK400-2*	500	2780	6150		
C500-1.5Z	500	101.32	20	1.2	2980	49.0	500.3	YKK450-2*	630	3980	7300		
C500-1.6Z	500	101.32	20	1.2	2980	58.8	586.7	YKK450-2*	710	4100	7350		
C500-1.7Z	500	101.32	20	1.2	2980	68.6	669.7	YKK450-2*	800	4250	8550		
C500-1.8Z	500	101.32	20	1.2	2980	78.4	749.6	YKK500-2*	900	5200	8600		
C500-1.9Z	500	101.32	20	1.2	2980	88.2	826.7	YKK500-2*	1000	5440	8650		
C500-2.0Z	500	101.32	20	1.2	2980	98.0	901.5	YKK500-2*	1120	5650	9800		
C550-1.3Z	550	101.32	20	1.2	2980	29.4	350.5	YKK400-2*	400	2580	5000		
C550-1.4Z	550	101.32	20	1.2	2980	39.2	453.0	YKK450-2*	560	4000	6150		
C550-1.5Z	550	101.32	20	1.2	2980	49.0	553.3	YKK450-2*	630	4300	7300		
C550-1.6Z	550	101.32	20	1.2	2980	58.8	649.4	YKK450-2*	800	4900	7350		
C550-1.7Z	550	101.32	20	1.2	2980	68.6	741.8	YKK500-2*	900	5200	8550		
C550-1.8Z	550	101.32	20	1.2	2980	78.4	830.9	YKK500-2*	1000	5440	8600		
C550-1.9Z	550	101.32	20	1.2	2980	88.2	917.1	YKK500-2*	1120	5650	8650		
C550-2.0Z	550	101.32	20	1.2	2980	98.0	1000.4	YKK500-2*	1250	5880	9800		
C600-1.3Z	600	101.32	20	1.2	2980	29.4	385.0	YKK400-2*	450	2680	6300		
C600-1.4Z	600	101.32	20	1.2	2980	39.2	494.2	YKK450-2*	630	4300	7380		
C600-1.5Z	600	101.32	20	1.2	2980	49.0	603.6	YKK450-2*	710	4600	8580		
C600-1.6Z	600	101.32	20	1.2	2980	58.8	708.4	YKK500-2*	900	5200	8600		
C600-1.7Z	600	101.32	20	1.2	2980	68.6	809.3	YKK500-2*	1000	5440	9800		
C600-1.8Z	600	101.32	20	1.2	2980	78.4	906.5	YKK500-2*	1120	5650	9850		
C600-1.9Z	600	101.32	20	1.2	2980	88.2	1000.5	YKK500-2*	1250	5880	11050		

风机型号 Type of Blower	进气状态 Suction Condition				工作转速 Speed rpm	升压 Discharge Pressure kPa	轴功率 Axial Power kW	电机Motor			主机重量 Blower Weight kg	进口法兰 Inlet Flange DN (PN1.0MPa)	出口法兰 Outlet Flange DN (PN1.0MPa)
	流量 Capacity m^3/min	压力 Pressure kPa	温度 Tempe-rature ℃	密度 Density kg/m^3				型号 Type	功率 Power kW	重量 Weight kg			
C650-1.3Z	650	101.32	20	1.2	2980	29.4	415.2	YKK400-2*	500	2780	6300	700	600
C650-1.4Z	650	101.32	20	1.2	2980	39.2	535.5	YKK450-2*	630	4300	7380		
C650-1.5Z	650	101.32	20	1.2	2980	49.0	653.9	YKK450-2*	800	4900	8580		
C650-1.6Z	650	101.32	20	1.2	2980	58.8	767.6	YKK500-2*	900	5200	8600		
C650-1.7Z	650	101.32	20	1.2	2980	68.6	876.8	YKK500-2*	1000	5440	9800		
C650-1.8Z	650	101.32	20	1.2	2980	78.4	982.1	YKK500-2*	1120	5650	9850		
C650-1.9Z	650	101.32	20	1.2	2980	88.2	1083.8	YKK500-2*	1250	5880	11050		
C700-1.3Z	700	101.32	20	1.2	2980	29.4	445.9	YKK450-2*	560	3880	6350		
C700-1.4Z	700	101.32	20	1.2	2980	39.2	576.6	YKK450-2*	710	4600	7580		
C700-1.5Z	700	101.32	20	1.2	2980	49.0	704.1	YKK450-2*	800	4900	8780		
C700-1.6Z	700	101.32	20	1.2	2980	58.8	826.3	YKK500-2*	1000	5440	8600		
C700-1.7Z	700	101.32	20	1.2	2980	68.6	944.1	YKK500-2*	1120	5650	10000		
C700-1.8Z	700	101.32	20	1.2	2980	78.4	1057.4	YKK500-2*	1250	5880	10050		
C700-1.9Z	700	101.32	20	1.2	2980	88.2	1166.9	YKK560-2*	1400	6800	11250		
C750-1.3Z	750	101.32	20	1.2	2980	29.4	478.0	YKK450-2*	560	3880	6350		
C750-1.4Z	750	101.32	20	1.2	2980	39.2	617.9	YKK450-2*	710	4600	7580		
C750-1.5Z	750	101.32	20	1.2	2980	49.0	754.4	YKK500-2*	900	5200	8780		
C750-1.6Z	750	101.32	20	1.2	2980	58.8	885.4	YKK500-2*	1120	5650	8600		
C750-1.7Z	750	101.32	20	1.2	2980	68.6	1011.5	YKK500-2*	1250	5880	10000		
C750-1.8Z	750	101.32	20	1.2	2980	78.4	1133.1	YKK560-2*	1400	6800	10050		
C750-1.9Z	750	101.32	20	1.2	2980	88.2	1250.8	YKK560-2*	1600	6900	11250		
C800-1.3Z	800	101.32	20	1.2	2980	29.4	510.0	YKK450-2*	630	3980	7100	800	700
C800-1.4Z	800	101.32	20	1.2	2980	39.2	659.0	YKK450-2*	800	4900	8900		
C800-1.5Z	800	101.32	20	1.2	2980	49.0	804.6	YKK500-2*	1000	5440	9100		
C800-1.6Z	800	101.32	20	1.2	2980	58.8	944.6	YKK500-2*	1120	5650	10700		
C800-1.7Z	800	101.32	20	1.2	2980	68.6	1079.1	YKK500-2*	1250	5880	11000		
C800-1.8Z	800	101.32	20	1.2	2980	78.4	1208.8	YKK560-2*	1400	6800	11300		
C850-1.3Z	850	101.32	20	1.2	2980	29.4	542.1	YKK450-2*	630	3980	7100		
C850-1.4Z	850	101.32	20	1.2	2980	39.2	700.1	YKK450-2*	800	4900	8900		
C850-1.5Z	850	101.32	20	1.2	2980	49.0	855.1	YKK500-2*	1000	5440	9100		
C850-1.6Z	850	101.32	20	1.2	2980	58.8	1003.9	YKK500-2*	1250	5880	10700		
C850-1.7Z	850	101.32	20	1.2	2980	68.6	1146.4	YKK560-2*	1400	6800	11000		
C850-1.8Z	850	101.32	20	1.2	2980	78.4	1284.2	YKK560-2*	1600	6900	11300		
C900-1.3Z	900	101.32	20	1.2	2980	39.2	574.7	YKK450-2*	710	4100	7300		
C900-1.4Z	900	101.32	20	1.2	2980	39.2	741.5	YKK500-2*	900	5200	9100		
C900-1.5Z	900	101.32	20	1.2	2980	49.0	905.5	YKK500-2*	1120	5650	9300		
C900-1.6Z	900	101.32	20	1.2	2980	58.8	1062.4	YKK500-2*	1250	5880	10900		
C900-1.7Z	900	101.32	20	1.2	2980	68.6	1213.9	YKK560-2*	1400	6800	11200		
C900-1.8Z	900	101.32	20	1.2	2980	78.4	1359.8	YKK560-2*	1600	6900	11500		

风机型号 Type of Blower	进气状态 Suction Condition				工作转速 Speed rpm	升压 Discharge Pressure kPa	轴功率 Axial Power kW	电机Motor			主机重量 Blower Weight kg	进口法兰 Inlet Flange DN (PN1.0MPa)	出口法兰 Outlet Flange DN (PN1.0MPa)
	流量 Capacity m^3/min	压力 Pressure kPa	温度 Tempe-rature ℃	密度 Density kg/m^3				型号 Type	功率 Power kW	重量 Weight kg			
C950-1.3Z	950	101.32	20	1.2	2980	29.4	608.2	YKK450-2*	710	4100	7300	800	600
C950-1.4Z	950	101.32	20	1.2	2980	39.2	782.4	YKK500-2*	900	5200	9100		
C950-1.5Z	950	101.32	20	1.2	2980	49.0	955.7	YKK500-2*	1120	5650	9300		
C950-1.6Z	950	1 01.32	20	1.2	2980	58.8	1121.6	YKK560-2*	1400	6800	10900		
C950-1.7Z	950	101.32	20	1.2	2980	68.6	1281.5	YKK560-2*	1600	6900	11200		
C950-1.8Z	950	101.3 2	20	1.2	2980	78.4	1435.3	YKK560-2*	1800	7160	11500		
C1000-1.3Z	1000	101.32	20	1.2	2980	29.4	636.8	YKK450-2*	710	4100	7400		
C1000-1.4Z	1000	101.32	20	1.2	2980	39.2	823.7	YKK500-2*	1000	5440	9200		
C1000-1.5Z	1000	101.32	20	1.2	2980	49.0	1005.7	YKK500-2*	1250	5880	9400		
C1000-1.6Z	1000	101.32	20	1.2	2980	58.8	1180.5	YKK560-2*	1400	6800	11000		
C1000-1.7Z	1000	101.32	20	1.2	2980	68.6	1348.5	YKK560-2*	1600	6900	11300		
C1000-1.8Z	1000	101.32	20	1.2	2980	78.4	1511.2	YKK560-2*	1800	7160	11600		

备注：1、当鼓风机的使用条件与上表不符时，需进行性能换算，我公司可根据用户要求进行非标设计，以满足用户各种工况的具体需要。

2、当输送非空气介质时，我公司对壳体内部及叶轮进行相应的防腐处理，以满足客户需求。

3、注:带“*”号的电机为6kV/10kV高压电机，其余电压为380V。

Notice: 1、When the atmospheric conditions and medium are varied, the relative performance conversion calculation wil be different We can re-designed in accordance with the requirement of users to adapt to different working condition

2、When transporting non air medium, our company carries on the corresponding antiseptic treatment to the inside of the shell and the impeller, so as to satisfy the customer's demand.

3、“* "are 6kV/10kV high-voltage motor, others are motors with voltage 380V.

铸造风机（油润滑）外形安装尺寸图 (C20-C35)（以合同提供图纸为准）

Casting Blower Oil Lubricate Outline and Installation Dimensions (Refer to the information given in the contract)

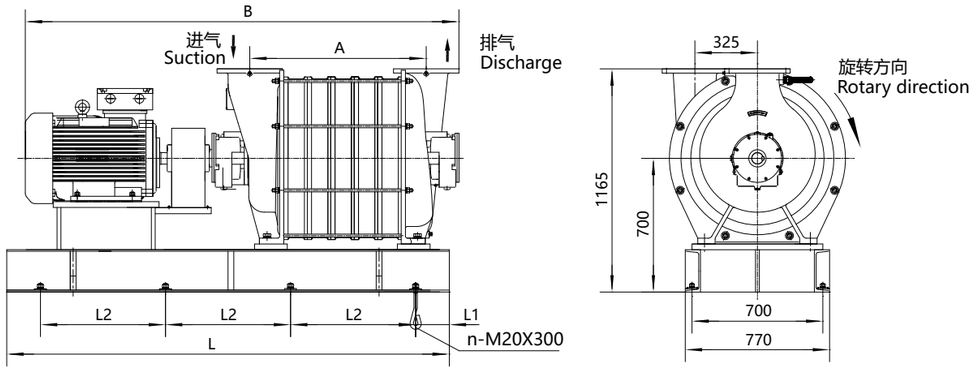

地脚螺栓孔布置图

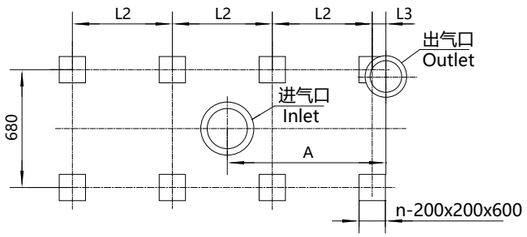

单位：mm
Unit：mm

风机型号 Type of Blower	机组外形尺寸 Outline Dimensions			地基尺寸 Foundation Dimensions				风机型号 Type of Blower	机组外形尺寸 Outline Dimensions			地基尺寸 Foundation Dimensions			
	A	B	L	L_1	L_2	L_3	n		A	B	L	L_1	L_2	L_3	n
C20-1.15Z	551	1708	1800	125	500	5	8	C30-1.15Z	551	1708	1800	125	500	5	8
C20-1.2Z	673	1895	1800	125	500	5	8	C30-1.2Z	673	1935	2000	125	550	5	8
C20-1.25Z								C30-1.25Z							
C20-1.3Z	795	2017	2000	125	550	5	8	C30-1.3Z	795	2057	2000	125	550	5	8
C20-1.35Z	917	2139	2200	125	650	5	8	C30-1.35Z	917	2179	2200	125	650	5	8
C20-1.4Z	1039	2298	2200	125	650	5	8	C30-1.4Z	1039	2343	2400	150	700	30	8
C20-1.45Z	1161	2423	2400	150	700	30	8	C30-1.45Z	1161	2468	2400	150	700	30	8
C20-1.5Z								C30-1.5Z							
C20-1.55Z	1283	2545	2400	150	700	30	8	C30-1.55Z	1283	2704	2600	175	750	55	8
C20-1.6Z								C30-1.6Z							
C20-1.65Z	1405	2667	2600	175	750	55	8	C30-1.65Z	1405	2822	2800	200	800	80	8
C20-1.7Z								C30-1.7Z							
C20-1.15Z	551	1708	1800	125	500	5	8	C35-1.15Z	551	1773	1800	175	500	5	8
C25-1.2Z	673	1895	1800	125	500	5	8	C35-1.2Z	673	1935	2000	125	550	5	8
C25-1.25Z								C35-1.25Z							
C25-1.3Z	795	2057	2000	125	550	5	8	C35-1.3Z	795	2057	2000	125	550	5	8
C25-1.35Z	917	2179	2200	125	650	5	8	C35-1.35Z	917	2179	2200	125	650	5	8
C25-1.4Z	1039	2298	2200	125	650	5	8	C35-1.4Z	1039	2343	2400	150	700	30	8
C25-1.45Z	1161	2423	2400	150	700	30	8	C35-1.45Z	1161	2468	2400	150	700	30	8
C25-1.5Z								C35-1.5Z							
C25-1.55Z	1283	2590	2600	175	750	55	8	C35-1.55Z	1283	2704	2800	175	750	55	8
C25-1.6Z								C35-1.6Z							
C25-1.65Z	1405	2712	2600	175	750	55	8	C35-1.65Z	1405	2907	2800	200	800	80	8
C25-1.7Z								C35-1.7Z							

铸造风机（油润滑）外形安装尺寸图 (C40-C60)（以合同提供图纸为准）

Casting Blower Oil Lubricate Outline and Installation Dimensions(Refer to the information given in the contract)

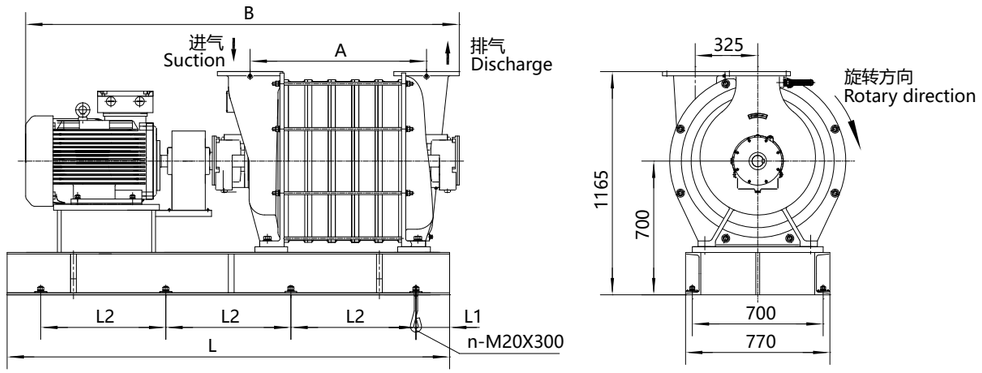

地脚螺栓孔布置图

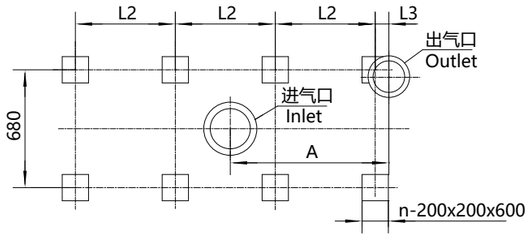

单位：mm
Unit：mm

风机型号 Type of Blower	机组外形尺寸 Outline Dimensions			地基尺寸 Foundation Dimensions				风机型号 Type of Blower	机组外形尺寸 Outline Dimensions			地基尺寸 Foundation Dimensions			
	A	B	L	L_1	L_2	L_3	n		A	B	L	L_1	L_2	L_3	n
C40-1.2Z	551	1813	1800	125	500	5	8	C50-1.5Z	1039	2457	2400	150	700	30	8
C40-1.3Z	673	1935	2000	125	550	5	8	C50-1.55Z	1161	2663	2600	175	750	55	8
C40-1.35Z	795	2057	2000	125	550	5	8	C50-1.6Z	1283	2785	2800	200	800	80	8
C40-1.4Z	917	2224	2200	125	650	5	8	C50-1.65Z	1405	2933	2800	200	800	80	8
C40-1.45Z								C50-1.7Z							
C40-1.5Z	1039	2343	2400	150	700	30	8	C55-1.2Z	551	1813	1800	125	500	5	8
C40-1.55Z	1161	2584	2600	175	750	55	8	C55-1.3Z	673	2010	2000	125	550	5	8
C40-1.6Z	1283	2704	2600	175	750	55	8	C55-1.35Z	795	2216	2200	125	650	5	8
C40-1.65Z	1405	2907	2800	200	800	80	8	C55-1.4Z	917	2338	2200	125	650	5	8
C40-1.7Z								C55-1.45Z							
C45-1.2Z	551	1813	1800	125	500	5	8	C55-1.5Z	1039	2538	2400	150	700	30	8
C45-1.3Z	673	1935	2000	125	550	5	8	C55-1.55Z	1161	2663	2600	175	750	55	8
C45-1.35Z	795	2102	2200	125	650	5	8	C55-1.6Z	1283	2816	2800	200	800	80	8
C45-1.4Z	917	2338	2200	125	700	5	8	C55-1.65Z	1405	2933	2800	200	800	80	8
C45-1.45Z								C55-1.7Z							
C45-1.5Z	1039	2457	2400	150	700	30	8	C60-1.2Z	551	1858	1800	125	500	5	8
C45-1.55Z	1161	2582	2600	175	750	55	8	C60-1.3Z	673	2094	2200	125	650	5	8
C45-1.6Z	1283	2785	2800	200	800	80	8	C60-1.35Z	795	2297	2200	125	650	5	8
C45-1.65Z	1405	2907	2800	200	800	80	8	C60-1.4Z	917	2419	2400	150	700	30	8
C45-1.7Z								C60-1.45Z							
C50-1.2Z	551	1813	1800	125	500	5	8	C60-1.5Z	1039	2538	2400	150	700	30	8
C50-1.25Z	673	1980	2000	125	550	5	8	C60-1.55Z	1161	2694	2600	175	750	55	8
C50-1.3Z	795	2216	2200	125	650	5	8	C60-1.6Z	1283	2816	2800	200	800	80	8
C50-1.35Z	917	2338	2200	125	650	5	8	C60-1.65Z	1405	3227	3000	225	850	155	8
C50-1.4Z								C60-1.7Z							

铸造风机（油润滑）外形安装尺寸图 (C65-C80)（以合同提供图纸为准）

Casting Blower Oil Lubricate Outline and Installation Dimensions(Refer to the information given in the contract)

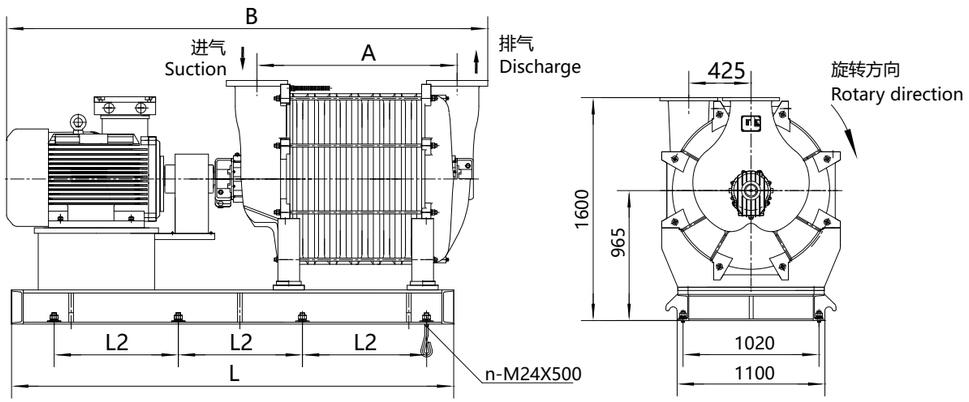

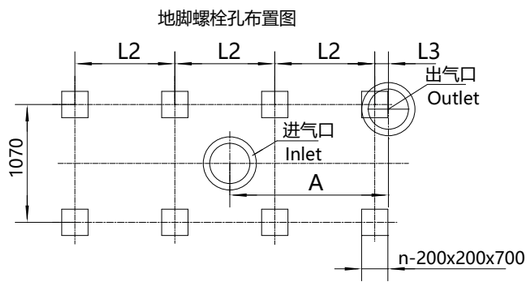

单位：mm
Unit：mm

风机型号 Type of Blower	机组外形尺寸 Outline Dimensions			地基尺寸 Foundation Dimensions				风机型号 Type of Blower	机组外形尺寸 Outline Dimensions			地基尺寸 Foundation Dimensions			
	A	B	L	L1	L2	L3	n		A	B	L	L1	L2	L3	n
C65-1.2Z	730	2274	2000	175	550	245	8	C70-1.65Z	1290	2904	2800	200	800	270	8
C65-1.3Z	870	2479	2200	125	650	195	8	C70-1.7Z	1430	3239	3000	225	850	295	8
C65-1.4Z	1010	2670	2400	150	700	220	8	C70-1.75Z							
C65-1.5Z	1150	2959	2600	175	750	245	8	C70-1.8Z							
C65-1.55Z								C70-1.9Z	1570	3489	3200	150	750	270	10
C65-1.6Z	1290	2904	2800	200	800	270	8	C75-1.2Z	730	2339	2000	175	550	245	8
C65-1.65Z								C75-1.3Z	870	2530	2200	125	650	195	8
C65-1.7Z	1430	3239	3000	225	850	295	8	C75-1.4Z	1010	2670	2400	150	700	220	8
C65-1.75Z								C75-1.5Z	1150	2959	2600	175	750	245	8
C65-1.8Z								C75-1.55Z							
C65-1.9Z	1570	3489	3200	150	750	270	10	C75-1.6Z	1290	3099	2800	200	800	270	8
C75-1.2Z	730	2274	2000	175	550	245	8	C75-1.65Z							
C70-1.3Z	870	2479	2200	125	650	195	8	C75-1.7Z	1430	3349	3000	225	850	295	8
C70-1.4Z	1010	2670	2400	150	700	220	8	C75-1.75Z							
C70-1.5Z	1150	2959	2600	175	750	245	8	C75-1.8Z							
C70-1.55Z								C75-1.9Z	1570	3489	3200	200	700	270	10
C70-1.6Z	1290	2904	2800	200	800	270	8								

铸造风机（油润滑）外形安装尺寸图（C80-C130）（以合同提供图纸为准）

Casting Blower Oil Lubricate Outline and Installation Dimensions(Refer to the information given in the contract)

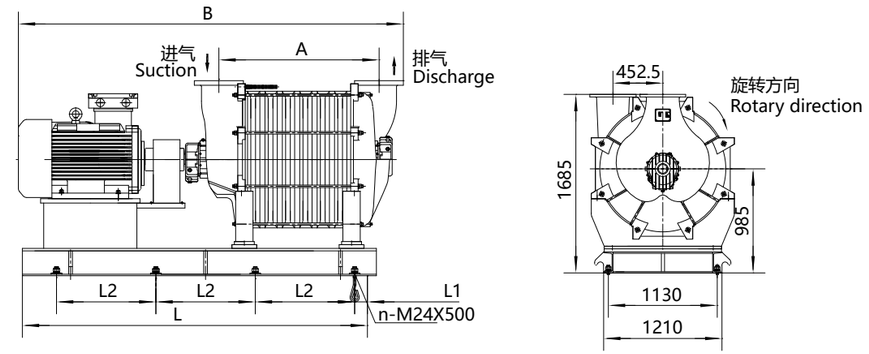

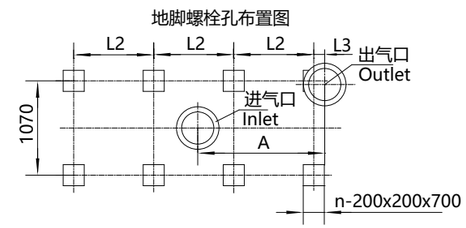

单位：mm
Unit：mm

风机型号 Type of Blower	机组外形尺寸 Outline Dimensions			地基尺寸 Foundation Dimensions				风机型号 Type of Blower	机组外形尺寸 Outline Dimensions			地基尺寸 Foundation Dimensions			
	A	B	L	L1	L2	L3	n		A	B	L	L1	L2	L3	n
C80-1.3Z	762	2388	2200	125	650	180	8	C110-1.3Z	762	2439	2200	125	650	180	8
C80-1.4Z	927	2604	2400	150	700	205	8	C110-1.4Z	927	2753	2400	150	700	205	8
C80-1.5Z	1092	2955	2600	175	750	230	8	C110-1.5Z	1092	3028	2600	175	750	230	8
C80-1.55Z								C110-1.55Z							
C80-1.6Z	1257	3083	2800	200	800	255	8	C110-1.6Z	1257	3193	2800	200	800	255	8
C80-1.65Z								C110-1.65Z							
C80-1.7Z								C110-1.7Z							
C80-1.75Z	1422	3502	3000	225	850	280	8	C110-1.75Z	1422	3553	3000	225	850	280	8
C80-1.8Z								C110-1.8Z							
C80-1.9Z	1587	3668	3200	200	700	255	10	C110-1.9Z	1587	3863	3400	200	750	255	10
C80-2.0Z								C110-2.0Z							
C90-1.3Z	762	2388	2200	125	650	180	8	C120-1.3Z	762	2439	2200	125	650	180	8
C90-1.4Z	927	2604	2400	150	700	205	8	C120-1.4Z	927	2753	2400	150	700	205	8
C90-1.5Z	1092	2918	2600	175	750	230	8	C120-1.5Z	1092	3028	2600	175	750	230	8
C90-1.6Z	1257	3193	2800	200	800	255	8	C120-1.6Z	1257	3388	3000	225	850	280	8
C90-1.65Z								C120-1.65Z							
C90-1.7Z								C120-1.7Z							
C90-1.75Z	1422	3353	3000	225	850	280	8	C120-1.75Z	1422	3698	3200	200	700	255	10
C90-1.8Z								C120-1.8Z							
C90-1.9Z	1587	3863	3400	200	750	255	10	C120-1.9Z	1587	3863	3400	200	750	255	10
C90-2.0Z								C120-2.0Z							
C100-1.3Z	762	2439	2200	125	650	180	8	C130-1.3Z	762	2588	2400	150	700	205	8
C100-1.4Z	927	2753	2400	150	700	205	8	C130-1.4Z	927	2863	2400	150	700	205	8
C100-1.5Z	1092	3028	2600	175	750	230	8	C130-1.5Z	1092	3028	2600	175	750	230	8
C100-1.55Z								C130-1.55Z							
C100-1.6Z	1257	3193	2800	200	800	255	8	C130-1.6Z	1257	3388	3000	225	850	280	8
C100-1.65Z								C130-1.65Z							
C100-1.7Z								C130-1.7Z							
C100-1.75Z	1422	3553	3000	225	850	280	8	C130-1.75Z	1422	3698	3200	200	700	255	10
C100-1.8Z								C130-1.8Z							
C100-1.9Z	1587	3863	3400	200	750	255	10	C130-1.9Z	1587	3863	3400	200	750	255	10
C100-2.0Z								C130-2.0Z							

铸造风机（油润滑）外形安装尺寸图 (C140-C160)(以合同提供图纸为准)

Casting Blower Oil Lubricate Outline and Installation Dimensions(Refer to the information given in the contract)

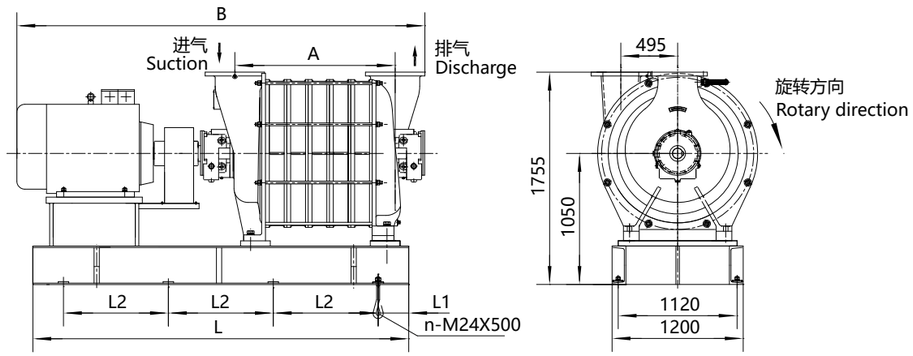

地脚螺栓孔布置图

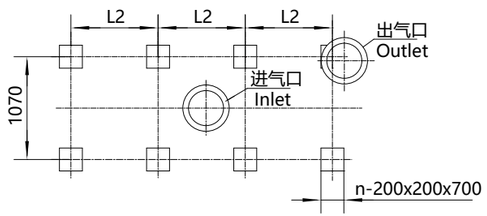

单位：mm
Unit：mm

风机型号 Type of Blower	机组外形尺寸 Outline Dimensions			地基尺寸 Foundation Dimensions				风机型号 Type of Blower	机组外形尺寸 Outline Dimensions			地基尺寸 Foundation Dimensions			
	A	B	L	L_1	L_2	L_3	n		A	B	L	L_1	L_2	L_3	n
C140-1.3Z	882	2689	2400	150	700	110	8	C150-1.65Z	1485	3741	3400	200	750	160	10
C140-1.35Z								C150-1.7Z							
C140-1.4Z	1083	2999	2600	175	750	135	8	C150-1.75Z							
C140-1.45Z								C150-1.8Z							
C140-1.5Z	1284	3345	3000	225	850	185	8	C150-1.9Z	1686	4033	3600	200	800	160	10
C140-1.55Z								C150-2.0Z							
C140-1.6Z								C160-1.3Z	882	2799	2400	150	700	110	8
C140-1.65Z	1485	3741	3400	200	750	160	10	C160-1.35Z							
C140-1.7Z								C160-1.4Z	1083	2999	2600	175	750	135	8
C140-1.75Z								C160-1.45Z							
C140-1.8Z								C160-1.5Z	1284	3540	3200	200	700	160	10
C140-1.9Z	1686	4033	3600	200	800	160	10	C160-1.55Z							
C140-2.0Z								C160-1.6Z							
C150-1.3Z	882	2689	2400	150	700	110	8	C160-1.65Z	1485	3831	3400	200	750	160	10
C150-1.35Z								C160-1.7Z							
C150-1.4Z	1083	2999	2600	175	750	135	8	C160-1.75Z							
C150-1.45Z								C160-1.8Z							
C150-1.5Z	1284	3540	3200	200	800	160	10	C160-1.9Z	1686	4514	4100	250	900	160	10
C150-1.55Z								C160-2.0Z							
C150-1.6Z															

铸造风机（油润滑）外形安装尺寸图 (C180-C200)(以合同提供图纸为准)

Casting Blower Oil Lubricate Outline and Installation Dimensions(Refer to the information given in the contract)

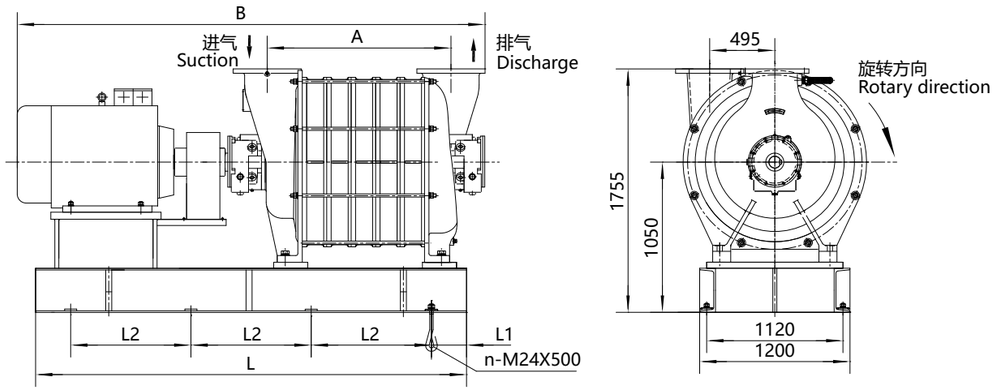

地脚螺栓孔布置图

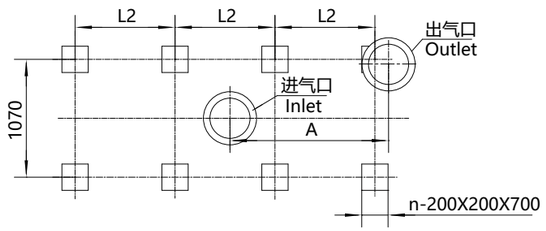

单位：mm
Unit：mm

风机型号 Type of Blower	机组外形尺寸 Outline Dimensions			地基尺寸 Foundation Dimensions				风机型号 Type of Blower	机组外形尺寸 Outline Dimensions			地基尺寸 Foundation Dimensions			
	A	B	L	L_1	L_2	L_3	n		A	B	L	L_1	L_2	L_3	n
C180-1.3Z	882	2799	2400	150	700	110	8	C200-1.3Z	902	2819	2400	150	700	110	8
C180-1.35Z								C200-1.35Z							
C180-1.4Z	1083	2999	2600	175	750	135	8	C200-1.4Z	1113	3224	2800	200	800	160	8
C180-1.45Z								C200-1.45Z							
C180-1.5Z	1284	3540	3200	200	700	160	8	C200-1.5Z	1324	3670	3200	200	700	160	8
C180-1.55Z								C200-1.55Z							
C180-1.6Z								C200-1.6Z	1535	3881	3400	200	750	160	10
C180-1.65Z	1485	3831	3400	200	750	160	10	C200-1.65Z							
C180-1.7Z								C200-1.7Z							
C180-1.75Z								C200-1.75Z							
C180-1.8Z								C200-1.8Z							
C180-1.9Z	1686	4523	4100	250	900	160	10	C200-1.9Z	1746	4728	4300	250	950	210	10
C180-2.0Z								C200-2.0Z							

铸造风机（油润滑）外形安装尺寸图 (C220-C250)(以合同提供图纸为准)

Casting Blower Oil Lubricate Outline and Installation Dimensions(Refer to the information given in the contract)

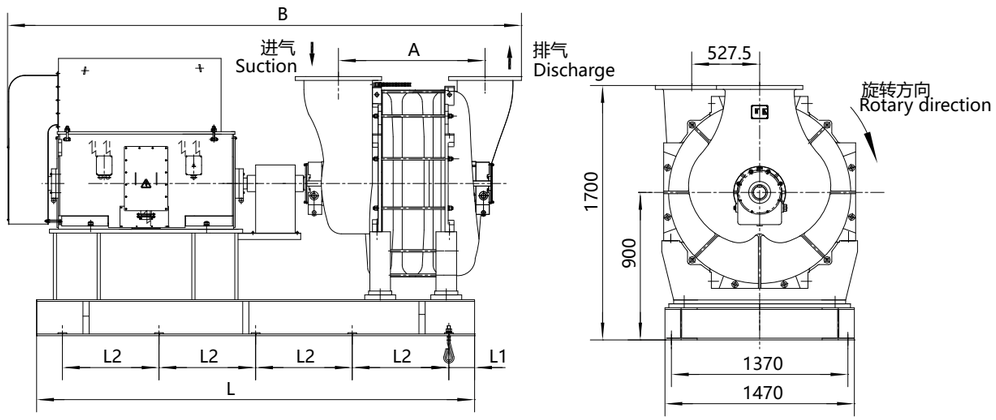

地脚螺栓孔布置图

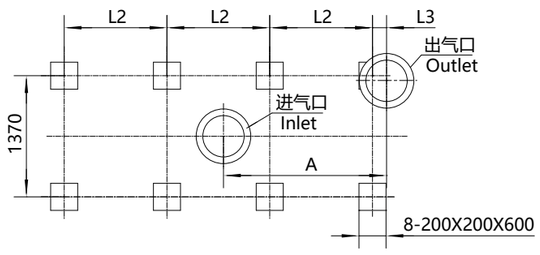

单位：mm
Unit：mm

风机型号 Type of Blower	机组外形尺寸 Outline Dimensions			地基尺寸 Foundation Dimensions				风机型号 Type of Blower	机组外形尺寸 Outline Dimensions			地基尺寸 Foundation Dimensions			
	A	B	L	L_1	L_2	L_3	n		A	B	L	L_1	L_2	L_3	n
C220-1.3Z	902	2819	2400	150	700	110	8	C250-1.3Z	902	2819	2500	200	700	110	8
C220-1.4Z	1113	3224	2800	200	800	160	8	C250-1.4Z	1113	3225	2800	200	800	110	8
C220-1.5Z	1324	3670	3200	200	700	160	10	C250-1.5Z	1324	3670	3200	200	700	160	10
C220-1.6Z								C250-1.6Z							
C220-1.7Z	1535	3881	3400	200	750	160	10	C250-1.7Z	1535	4518	4100	250	900	160	10
C220-1.8Z								C250-1.8Z							
C220-1.9Z	1746	4728	4300	250	950	210	10	C250-1.9Z	1746	4968	4300	250	900	210	10
C220-2.0Z								C250-2.0Z							

铸造风机（油润滑）外形安装尺寸图 (C300-C350)(以合同提供图纸为准)

Casting Blower Oil Lubricate Outline and Installation Dimensions(Refer to the information given in the contract)

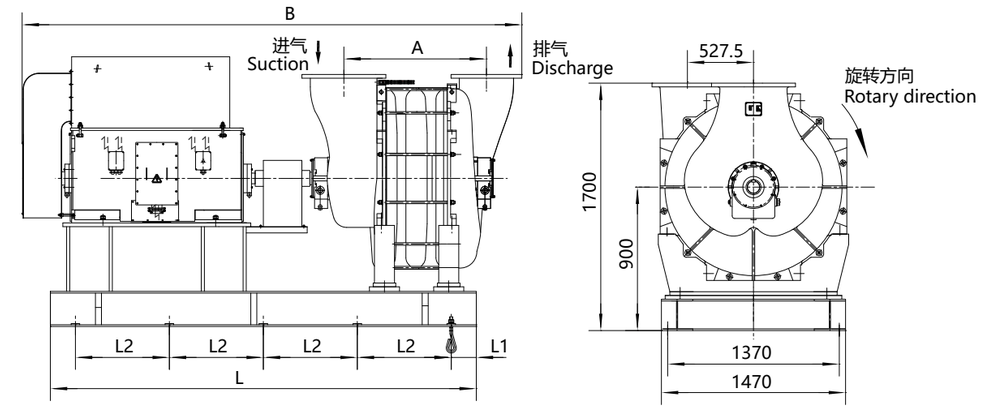

地脚螺栓孔布置图

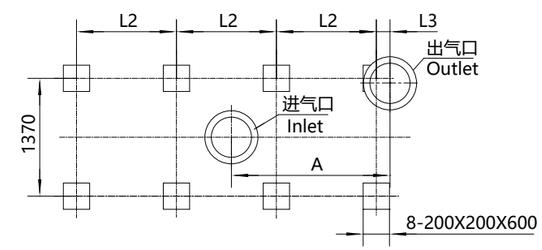

单位：mm
Unit：mm

风机型号 Type of Blower	机组外形尺寸 Outline Dimensions			地基尺寸 Foundation Dimensions				风机型号 Type of Blower	机组外形尺寸 Outline Dimensions			地基尺寸 Foundation Dimensions			
	A	B	L	L_1	L_2	L_3	n		A	B	L	L_1	L_2	L_3	n
C300-1.3Z	1138	3869	3450	225	750	330	10	C350-1.3Z	1138	3869	3450	225	750	330	10
C300-1.4Z	1378	4299	3750	250	800	380	10	C350-1.4Z	1378	4299	3750	250	800	380	10
C300-1.5Z								C350-1.5Z							
C300-1.6Z	1618	4739	4150	275	900	405	10	C350-1.6Z	1618	4739	4150	275	900	405	10
C300-1.7Z								C350-1.7Z							
C300-1.8Z	1858	4979	4300	250	950	380	10	C350-1.8Z	1858	4979	4300	250	950	380	10
C300-1.9Z	2098	5219	4500	250	1000	380	10	C350-1.9Z	2098	5219	4500	250	1000	380	10
C300-2.0Z								C350-2.0Z							

铸造风机（油润滑）外形安装尺寸图 (C400-C600)（以合同提供图纸为准）

Casting Blower Oil Lubricate Outline and Installation Dimensions(Refer to the information given in the contract)

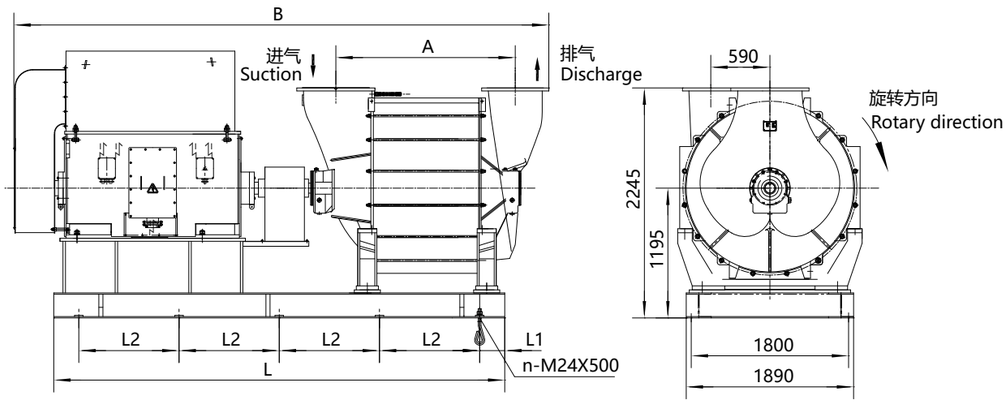

地脚螺栓孔布置图

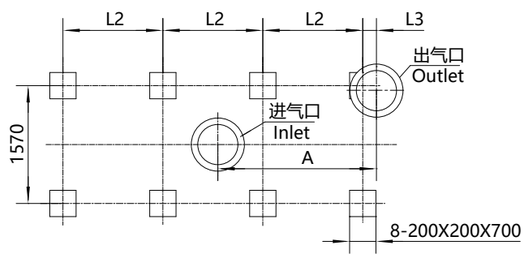

单位：mm
Unit：mm

风机型号 Type of Blower	机组外形尺寸 Outline Dimensions			地基尺寸 Foundation Dimensions				风机型号 Type of Blower	机组外形尺寸 Outline Dimensions			地基尺寸 Foundation Dimensions			
	A	B	L	L_1	L_2	L_3	n		A	B	L	L_1	L_2	L_3	n
C400-1.3Z	1105	4143	3800	200	850	185	10	C500-1.7Z	1635	4982	4460	300	965	185	10
C400-1.4Z								C500-1.8Z							
C400-1.5Z	1370	4727	4300	250	950	185	10	C500-1.9Z							
C400-1.6Z								C500-2.0Z	1900	5338	5000	250	950	185	12
C400-1.7Z	1635	4982	4460	300	965	185	10	C600-1.3Z	1105	4143	3800	200	850	185	10
C400-1.8Z								C600-1.4Z							
C400-1.9Z								C600-1.5Z	1370	4727	4300	250	950	185	10
C400-2.0Z	1900	5338	5000	250	950	185	12	C600-1.6Z							
C500-1.3Z	1105	4143	3800	200	850	185	10	C600-1.7Z	1635	4982	4460	300	965	185	10
C500-1.4Z								C600-1.8Z							
C500-1.5Z	1370	4727	4300	250	950	185	10	C600-1.9Z							
C500-1.6Z								C600-2.0Z	1900	5338	5000	250	950	185	12

铸造风机（油润滑）外形安装尺寸图 (C800-C1000)（以合同提供图纸为准）

Casting Blower Oil Lubricate Outline and Installation Dimensions(Refer to the information given in the contract)

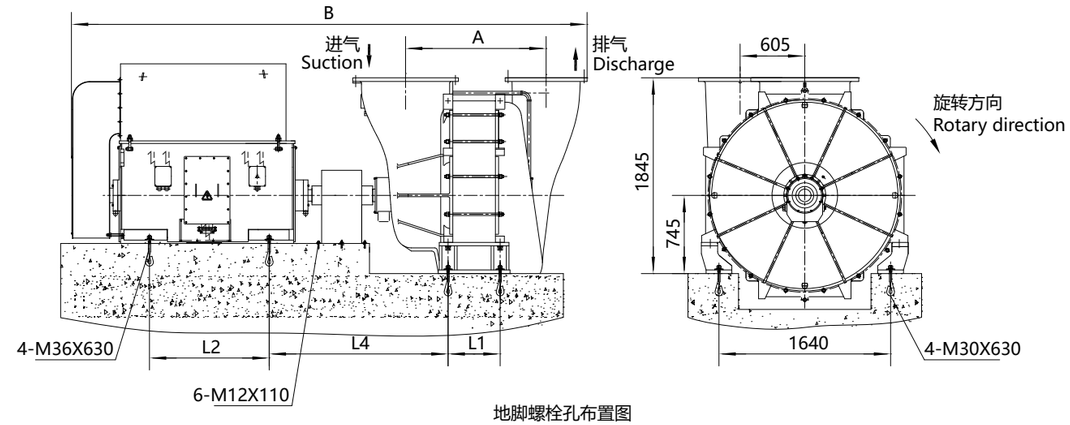

地脚螺栓孔布置图

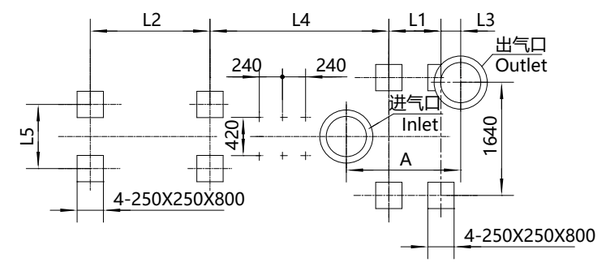

单位：mm
Unit：mm

风机型号 Type of Blower	机组外形尺寸 Outline Dimensions		地基尺寸 Foundation Dimensions					风机型号 Type of Blower	机组外形尺寸 Outline Dimensions		地基尺寸 Foundation Dimensions				
	A	B	L_1	L_2	L_3	L_4	L_5		A	B	L_1	L_2	L_3	L_4	L_5
C700-1.3Z	1115	4624	300	1120	440	1682	800	C850-1.6Z	1935	5654	790	1250	440	1842	900
C700-1.4Z	1405	5130	590	1250	440	1842	900	C850-1.7Z							
C700-1.5Z								C850-1.8Z							
C700-1.6Z	1695	5454	880					C900-1.3Z	1315	5014	470	1250	440	1842	900
C700-1.7Z								C900-1.4Z	1635	5330	790				
C700-1.8Z								C900-1.5Z							
C750-1.3Z	1115	4624	300	1120	440	1682	800	C900-1.6Z	1955	5799	1110	1400	115	1882	1000
C750-1.4Z	1405	5130	590	1250	440	1842	900	C900-1.7Z							
C750-1.5Z								C900-1.8Z							
C750-1.6Z	1695	5454	880					C950-1.3Z	1315	5014	470	1250	440	1842	900
C750-1.7Z								C950-1.4Z	1635	5330	790				
C750-1.8Z								C950-1.5Z							
C800-1.3Z	1315	4824	470	1120	440	1682	800	C950-1.6Z	1955	5799	1110	950	115	1882	1000
C800-1.4Z	1635	5330	790	1250	440	1842	900	C950-1.7Z							
C800-1.5Z								C950-1.8Z							
C800-1.6Z	1935	5654	1110					C1000-1.3Z	1315	5014	470	1250	440	1842	900
C800-1.7Z								C1000-1.4Z	1635	5330	790				
C800-1.8Z								C1000-1.5Z							
C850-1.3Z	1315	4824	470	1120	440	1682	800	C1000-1.6Z	1955	5799	1110	1440	115	1882	1000
C850-1.4Z	1635	5330	790	1250	440	1842	900	C1000-1.7Z							
C850-1.5Z								C1000-1.6Z							

配套产品

Accessories For Blowers

● 止回阀

Non-return Valve

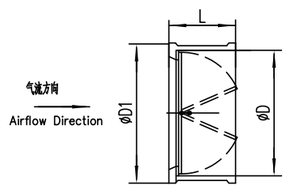

(GB1.0MPa 法兰 FLange)

型号 Type	ØD1	ØD	L
DN100	162	117	64
DN125	192	145	70
DN150	218	170	76
DN200	273	224	89
DN250	328	267	114
DN300	378	310	114
DN350	438	360	127
DN400	489	410	140
DN450	539	450	152
DN500	594	505	152
DN600	696	624	178
DN700	811	720	229
DN800	910	825	241

● 三通

Three-way Pipe

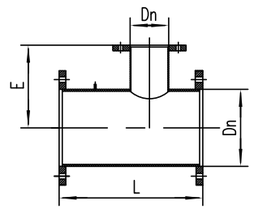

(GB1.0MPa 法兰 FLange)

型号 Type	L	E	Dn	Dn'
ST-125-150	320	220	150	125
ST-125-200	350	240	200	125
ST-150-250	420	270	250	125
ST-150-300	500	300	300	150
ST-150-350	600	320	345	150
ST-250-400	650	350	455	250
ST-250-450	700	400	450	250
ST-250-500	750	450	500	250
ST-300-600	800	480	600	300

● XSQ & ZRL型进口滤清器

Type XSQ & ZRL Inlet Filter

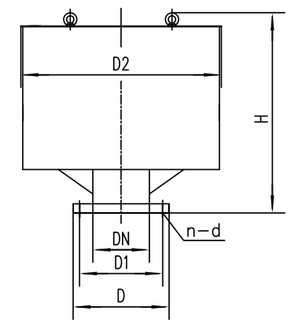

(GB1.0MPa 法兰 FLange)

滤清器型号 Filter Type	滤清器主要尺寸 (mm) Filter Dimension						重量 Weight
	DN	D1	D	D2	n-d	H	
XSQ-ZG-150A	150	240	285	540	8-ø22	547	72
XSQ-ZG-200A	200	295	340	710	8-ø22	709	95
XSQ-ZG-250A	250	350	395	710	12-ø22	791	100
XSQ-ZG-300A	300	400	445	860	12-ø22	904	188
ZRL-200	250	350	395	530	12-ø22	355	55
ZRL-250	350	460	505	560	12-ø22	537	55
ZRL-300A	300	400	445	810	12-ø22	643	61
ZRL-350A	350	460	505	860	16-ø22	683	69
ZRL-400A	400	515	565	1060	16-ø26	813	119
ZRL-450A	450	565	615	1160	20-ø26	913	142
ZRL-500A	500	620	670	1260	20-ø26	1013	170
ZRL-600A	600	725	780	1510	20-ø29	1105	216
ZRL-700A	700	840	895	1710	24-ø30	1173	308

● KM & KMC型出口消声器

Type KM & KMC Outlet Silencer

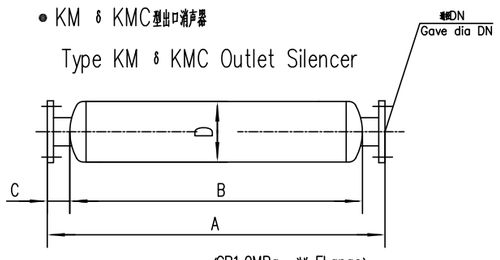

(GB1.0MPa 法兰 FLange)

消声器型号 Silence Type	消声器主要尺寸 (mm) Filter Dimension					重量 Weight
	DN	D	A	B	C	
KM-125	125	260	1400	1210	95	45
KM-150	150	281	1600	1410	95	61
KMC-200	200	461	1100	740	180	58
KMC-250	250	516	1220	860	180	87
KMC-300	300	618	1320	840	240	116
KMC-350	350	668	1414	934	240	127
KMC-400	400	718	1514	1034	240	168
KMC-450	450	768	1614	1134	240	185
KMC-500	500	818	2000	1520	240	250
KMC-600	600	1000	2300	2060	140	662
KMC-700	700	1100	1800	1580	110	731
KMC-800	800	1300	1800	1580	110	860
KMC-900	900	1300	2000	1700	150	960
KMC-1000	1000	1400	3000	2700	150	1746

● 弹性接头 (KXT -Ⅲ型)

Type KXT -Ⅲ Flexible Connector

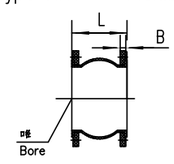

(GB1.0MPa 法兰 FLange)

口径 Bore	L	B	水平位移(mm) Level Moving Distance 伸长 Elongation	压缩 Compressing	倾向位移(mm) Bevel Displacement	偏转角度(°) Deflection Angle	重量 Weight
100	180	22	12	20	13	15	11.9
150	180	24	12	20	14	15	11.9
200	190	24	16	25	22	15	13.5
250	230	28	16	25	22	15	20.8
300	245	28	16	25	22	15	24.6
350	255	28	16	25	22	15	30.5
400	255	30	16	25	22	15	32.5
450	255	30	16	25	22	15	37.3
500	255	32	16	25	22	15	55
600	255	32	16	25	22	15	98.8
700	255	32	16	25	22	15	130
800	255	32	16	25	22	15	174
900	255	42	16	25	22	15	196.6
1000	255	44	16	25	22	15	245

● 波纹补偿器 (SHTJ型)

Type SHTJT Ripple Compensator

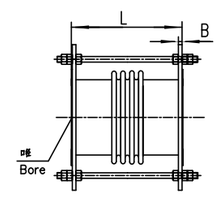

(GB1.0MPa 法兰 FLange)

口径 Bore	L	B	水平位移(mm) Level Moving Distance 横向位移 Lateral	轴向拉伸 Elongation	轴向压缩 Compressing	偏转角度(°) Deflection Angle	重量 Weight
100	150	22	4	10	15	1	12
150	200	24	10	10	50	1	18.4
200	200	24	10	10	50	1	24.72
250	300	26	10	10	65	3	32.1
300	300	28	10	10	65	3	38.7
350	400	28	20	10	100	3	47.7
400	400	30	20	10	100	3	65.4
450	400	30	20	10	100	3	73.2
500	450	32	20	10	100	3	83.1
600	450	36	20	10	100	3	118.2
700	500	36	20	10	120	3	165
800	500	38	20	10	120	3	231
900	500	42	25	15	120	3	257.4
1000	500	44	25	15	120	3	318

● 进、出气口法兰 (参照GB1.0MPa法兰)

Suction、Discharge Flange (AccordingGB1.0MPa FLange)

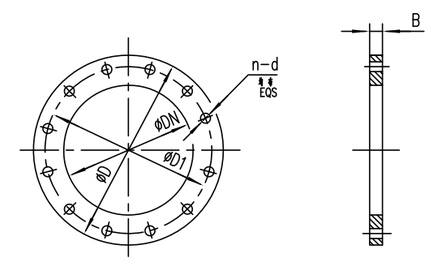

(GB1.0MPa 法兰 FLange)

Bore 口径	DN	D	D1	B	n	d
125 A	125	250	210	20	8	ø18
150 A	150	285	240	22	8	ø22
200 A	200	340	295	22	8	ø22
250 A	250	395	350	22	12	ø22
300 A	300	445	400	24	12	ø22
350 A	350	505	460	24	16	ø22
400 A	400	565	515	24	16	ø26
450 A	450	615	565	24	20	ø26
500 A	500	670	620	26	20	ø26
600 A	600	780	725	26	20	ø29
700 A	700	895	840	30	24	ø30
800 A	800	1015	950	32	24	ø33
900 A	900	1115	1050	34	24	ø33