GB

Industrial gas burner

Two stage progressive or modulating operation

CODE	MODEL
20180319	DB 20 SE FGR

20180802 (1) - 06/2020

Translation of the original instructions

1 Information and general warnings ... 3
1.1 Information about the instruction manual ... 3
1.1.1 Introduction ... 3
1.1.2 General dangers ... 3
1.1.3 Other symbols ... 3
1.1.4 Delivery of the system and the instruction manual ... 4
1.2 Guarantee and responsibility ... 4

2 Safety and prevention ... 5
2.1 Introduction ... 5
2.2 Personnel training ... 5

3 Technical description of the burner ... 6
3.1 Burner designation ... 6
3.2 Models available ... 7
3.3 Burner categories - Countries of destination ... 7
3.4 Technical data ... 7
3.5 Electrical data ... 7
3.6 Maximum dimensions ... 8
3.7 Flange dimensions ... 8
3.8 Firing rate ... 9
3.9 Test boiler ... 9
3.10 Air side pressure drop (measured upstream of the damper with complete opening) ... 10
3.11 Gas side pressure drop ... 11
3.12 Description of burner components ... 12
3.13 Burner equipment ... 12
3.14 Servomotor (SQM48.4....) ... 13

4 Installation ... 14
4.1 Notes on safety for the installation ... 14
4.2 Handling ... 14
4.3 Preliminary checks ... 14
4.4 Operating position ... 15
4.5 Removing the shutter lockout screws ... 15
4.6 Preparing the boiler ... 15
4.6.1 Boring the boiler plate ... 15
4.6.2 Blast tube length ... 15
4.7 Lifting points ... 16
4.8 Boiler fixing ... 16
4.9 Access to head internal part ... 17
4.10 Electrode positioning ... 17
4.11 FGR duct system ... 18
4.12 Gas feeding ... 19
4.12.1 Gas feed connection to the burner ... 19
4.12.2 General gas supply layout (example) ... 19
4.12.3 Gas train ... 20
4.12.4 Gas train installation ... 20
4.12.5 Gas pressure ... 20
4.12.6 Pilot - gas train connection ... 21
4.13 Electrical wiring ... 22
4.13.1 Supply cables and external connections passage ... 22

5 Start-up, calibration and operation of the burner ... 23
5.1 Notes on safety for the first start-up ... 23
5.2 Combustion head adjustment ... 23
5.3 Adjustments prior to ignition ... 24
5.4 Burner start-up ... 24
5.5 Ignition pilot burner ... 24
5.6 Burner ignition ... 24
5.7 Combustion air adjustment ... 25
5.7.1 Air / gas adjustment and output modulation ... 25
5.8 FGR commissioning ... 25

5.9 Pressure switch adjustment 26
5.9.1 Air pressure switch 26
5.9.2 Maximum gas pressure switch 26
5.9.3 Minimum gas pressure switch 27
5.10 Final checks (with burner operating) 27

6 Maintenance 28
6.1 Notes on safety for the maintenance 28
6.2 Maintenance programme 28
6.2.1 Maintenance frequency 28
6.2.2 Safety test - with gas ball valve closed 28
6.2.3 Checking and cleaning 28
6.2.4 Safety components 29
6.2.5 Replacing the shutter 30
6.2.6 Dismantling the flame sensor 31
6.3 Opening the burner 31
6.4 Closing the burner 31

7 Faults - Possible causes - Solutions 32

A Appendix - Electrical panel layout 34

1 Information and general warnings

1.1 Information about the instruction manual

1.1.1 Introduction

The instruction manual supplied with the burner:

- ➤ is an integral and essential part of the product and must not be separated from it; it must therefore be kept carefully for any necessary consultation and must accompany the burner even if it is transferred to another owner or user, or to another system. If the manual is lost or damaged, another copy must be requested from the Technical Assistance Service of the area;
- ➤ is designed for use by qualified personnel;
- ➤ offers important indications and instructions relating to the installation safety, start-up, use and maintenance of the burner.

Symbols used in the manual

In some parts of the manual you will see triangular DANGER signs. Pay great attention to these, as they indicate a situation of potential danger.

1.1.2 General dangers

The **dangers** can be of **3 levels**, as indicated below.

Maximum danger level!
This symbol indicates operations which, if not carried out correctly, cause serious injury, death or long-term health risks.

This symbol indicates operations which, if not carried out correctly, may cause serious injury, death or long-term health risks.

This symbol indicates operations which, if not carried out correctly, may cause damage to the machine and/or injury to people.

1.1.3 Other symbols

DANGER: LIVE COMPONENTS

This symbol indicates operations which, if not carried out correctly, lead to electric shocks with lethal consequences.

DANGER: FLAMMABLE MATERIAL

This symbol indicates the presence of flammable materials.

DANGER: BURNING

This symbol indicates the risks of burns due to high temperatures.

DANGER: CRUSHING OF LIMBS

This symbol indicates the presence of moving parts: danger of crushing of limbs.

WARNING: MOVING PARTS

This symbol indicates that you must keep limbs away from moving mechanical parts; danger of crushing.

DANGER: EXPLOSION

This symbol signals places where an explosive atmosphere may be present. An explosive atmosphere is defined as a mixture - under atmospheric conditions - of air and flammable substances in the form of gases, vapours, mist or dust in which, after ignition has occurred, combustion spreads to the entire unburned mixture.

PERSONAL PROTECTION EQUIPMENT

These symbols indicate the equipment that must be worn and kept by the operator for protection against threats against safety and/or health while at work.

OBLIGATION TO ASSEMBLE THE COVER AND ALL THE SAFETY AND PROTECTION DEVICES

This symbol signals the obligation to reassemble the cover and all the safety and protection devices of the burner after any maintenance, cleaning or checking operations.

ENVIRONMENTAL PROTECTION

This symbol gives indications for the use of the machine with respect for the environment.

IMPORTANT INFORMATION

This symbol indicates important information that you must bear in mind.

➤ This symbol indicates a list.

Abbreviations used

Ch.	Chapter
Fig.	Figure
Page	Page
Sec.	Section
Tab.	Table

1.1.4 Delivery of the system and the instruction manual

When the system is delivered, it is important that:

➤ the instruction manual is delivered to the user by the system manufacturer, with the recommendation to keep it in the room where the heat generator is to be installed.

➤ The instruction manual shows:
– the serial number of the burner;

.....

– the address and telephone number of the nearest Assistance Centre.

.....
.....
.....

➤ The system supplier must carefully inform the user about:
– the use of the system;
– any further tests that may be required before activating the system;
– maintenance, and the need to have the system checked at least once a year by a representative of the manufacturer or another specialised technician.
To ensure a periodic check, the manufacturer recommends the drawing up of a Maintenance Contract.

1.2 Guarantee and responsibility

The manufacturer guarantees its new products from the date of installation, in accordance with the regulations in force and/or the sales contract. At the moment of the first start-up, check that the burner is integral and complete.

WARNING

Failure to observe the information given in this manual, operating negligence, incorrect installation and carrying out of non authorised modifications will result in the annulment by the manufacturer of the guarantee that it supplies with the burner.

In particular, the rights to the guarantee and the responsibility will no longer be valid, in the event of damage to things or injury to people, if such damage/injury was due to any of the following causes:

➤ incorrect installation, start-up, use and maintenance of the burner;
➤ improper, incorrect or unreasonable use of the burner;
➤ intervention of unqualified personnel;
➤ carrying out of unauthorised modifications on the equipment;
➤ use of the burner with safety devices that are faulty, incorrectly applied and/or not working;
➤ installation of untested supplementary components on the burner;
➤ powering of the burner with unsuitable fuels;
➤ faults in the fuel supply system;
➤ continuation of use of the burner when a fault has occurred;
➤ repairs and/or overhauls incorrectly carried out;
➤ modification of the combustion chamber with inserts that prevent the regular development of the structurally established flame;
➤ insufficient and inappropriate surveillance and care of those burner components most likely to be subject to wear and tear;
➤ use of non-original components, including spare parts, kits, accessories and optional;
➤ force majeure.

The manufacturer furthermore declines any and every responsibility for the failure to observe the contents of this manual.

2 Safety and prevention

2.1 Introduction

The burners have been designed and built in compliance with current regulations and directives, applying the known technical rules of safety and envisaging all the potential danger situations.

It is necessary, however, to bear in mind that the imprudent and clumsy use of the equipment may lead to situations of death risk for the user or third parties, as well as the damaging of the burner or other items. Inattention, thoughtlessness and excessive confidence often cause accidents; the same applies to tiredness and sleepiness.

It is a good idea to remember the following:

➤ The burner must only be used as expressly described. Any other use should be considered improper and therefore dangerous.

In particular:

it can be applied to boilers operating with water, steam, diathermic oil, and to other uses expressly foreseen by the manufacturer;

the type and pressure of the fuel, the voltage and frequency of the electrical power supply, the minimum and maximum deliveries for which the burner has been regulated, the pressurisation of the combustion chamber, the dimensions of the combustion chamber and the room temperature must all be within the values indicated in the instruction manual.

➤ Modification of the burner to alter its performance and destinations is not allowed.

➤ The burner must be used in exemplary technical safety conditions. Any disturbances that could compromise safety must be quickly eliminated.

➤ Opening or tampering with the burner components is not allowed, apart from the parts requiring maintenance.

➤ Only those parts envisaged by the manufacturer can be replaced.

The manufacturer guarantees safety and proper functioning only if all burner components are intact and positioned correctly.

2.2 Personnel training

The user is the person, body or company that has acquired the machine and intends to use it for the specific purpose. He is responsible for the machine and for the training of the people working around it.

The user:

➤ undertakes to entrust the machine exclusively to suitably trained and qualified personnel;

➤ undertakes to inform his personnel in a suitable way about the application and observance of the safety instructions. With that aim, the user undertakes to ensure that everyone knows the use and safety instructions for his own duties.

➤ Personnel must follow all the danger and caution indications shown on the machine.

➤ Personnel must not carry out, on their own initiative, operations or interventions that are not within their province.

➤ Personnel are obliged to inform their superiors of every problem or dangerous situation that may arise.

➤ The assembly of parts of other makes, or any modifications, can alter the characteristics of the machine and hence compromise operating safety. The manufacturing company therefore accepts no responsibility whatsoever for any which may result from the use of non-original parts.

In addition:

➤ must take all the measures necessary to prevent unauthorised people gaining access to the machine;

➤ the user must inform the manufacturer if faults or malfunctioning of the accident prevention systems are noticed, along with any presumed danger situation;

➤ personnel must always use the personal protective equipment envisaged by legislation and follow the indications given in this manual.

3 Technical description of the burner

3.1 Burner designation

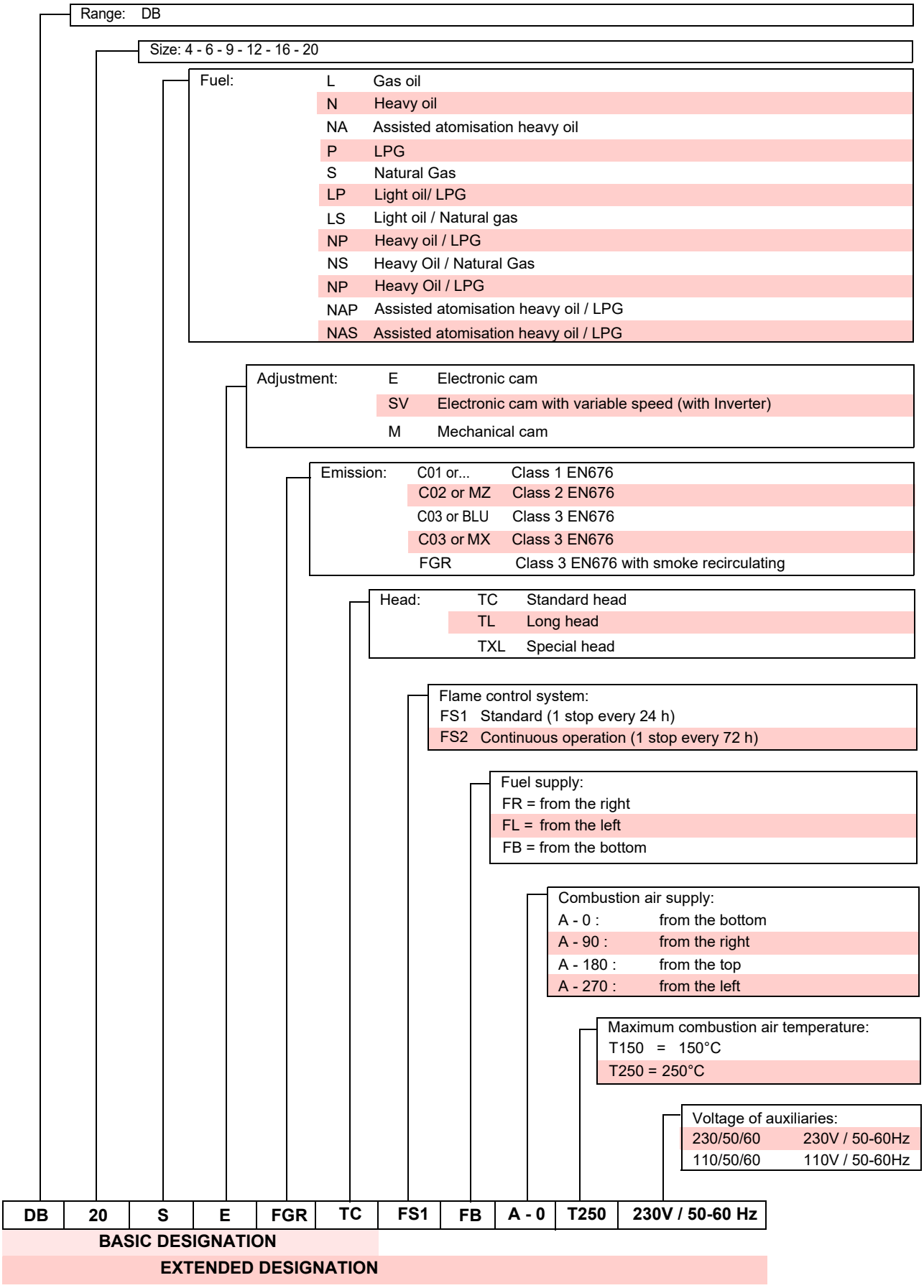

3.2 Models available

Designation	Voltage	Code
DB20 SE FGR TC FB A0 T250	1N/230V/50Hz	20180319

Tab. A

3.3 Burner categories - Countries of destination

Gas category	Destination country
I_{2H}	SE - FI - AT - GR - DK - ES - GB - IT - IE - PT - IS - CH - NO
I_{2ELL}	DE
I_{2L} - I_{2E} - I_2 (43,46 ÷ 45,3 MJ/m^3 (0°C))	NL
I_{2Er}	FR
$I_{2E(R)B}$	BE
I_{2E}	LU - PL

Tab. B

3.4 Technical data

Model			**DB 20 SE FGR**
Output (1)	min - max	kW	4000/10000 ÷ 20000
Fuels			– Natural gas: G20 - NCV 10 kWh/Nm^3 – Natural gas: G25 - NCV 8.6 kWh/Nm^3
Gas pressure at max. output (2) - Gas: G20/G25		mbar	50/74
Operation			– FS1 Intermittent (min. 1 stop every 24 hours) – Modulating
Modulating ratio at maximum output			1: 5
Combustion air temperature		°C max	150
Ignition			Electrogas type (pilot burner with natural gas)
Weight		kg	460

Tab. C

(1) Reference conditions: Ambient temperature 20°C - Gas temperature 15°C - Barometric pressure 1013 mbar - Altitude 0 m a.s.l.
(2) Pressure at the test point with zero pressure in the combustion chamber and at the maximum output of the burner.

3.5 Electrical data

Model		**DB 20 SE FGR**
Electrical supply		230 V / 50-60 Hz
Ignition transformer	V1 - V2 I1 - I2	230 V - 1 x 8 kV 1.4 A - 30 mA
Electric power consumption	kW max	0.41
Protection level		IP 50

Tab. D

3.6 Maximum dimensions

The maximum dimensions of the burner are given in Fig. 1.

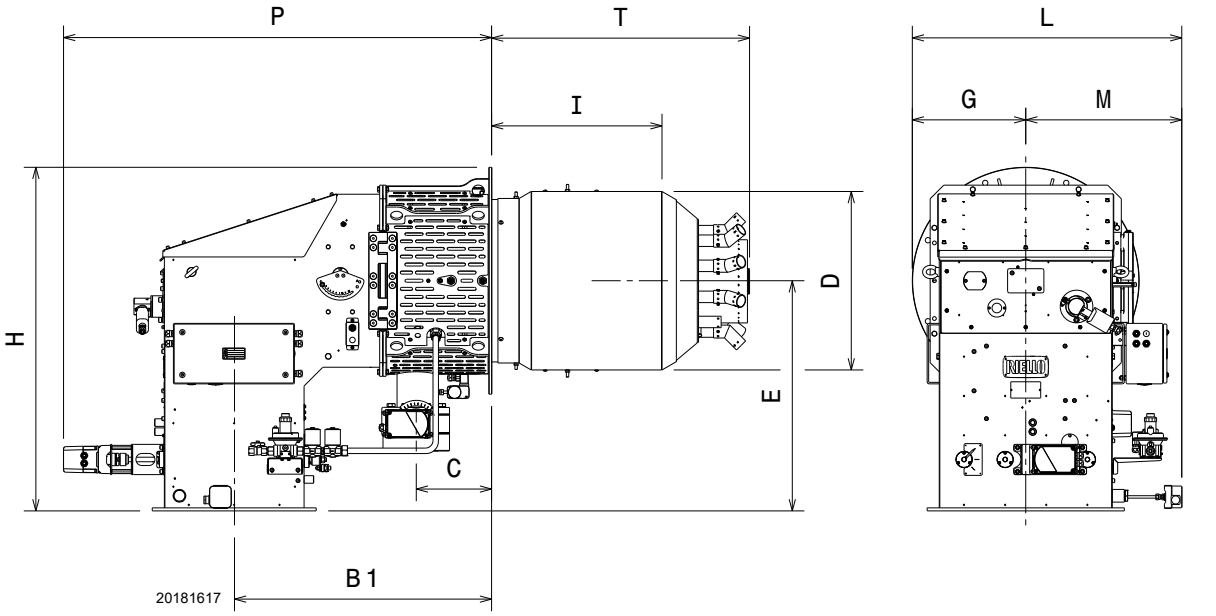

Fig. 1

Model	B1	C	D	E	G	H	I	L	M	P	T
DB 20 SE FGR	852	250	590	761	375	1136	561	892	517	1417	852

Tab. E

3.7 Flange dimensions

Air duct connection

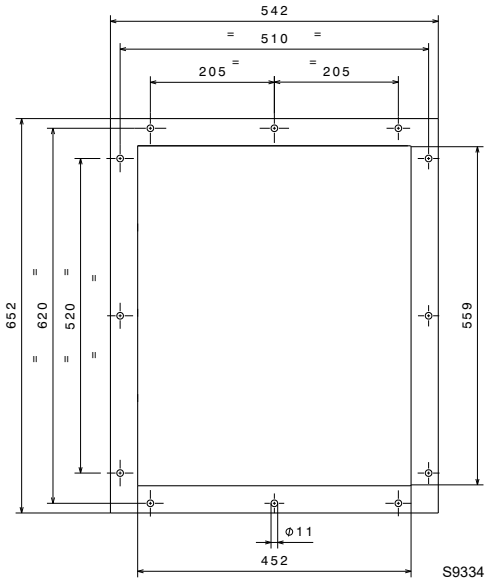

Boiler fixing

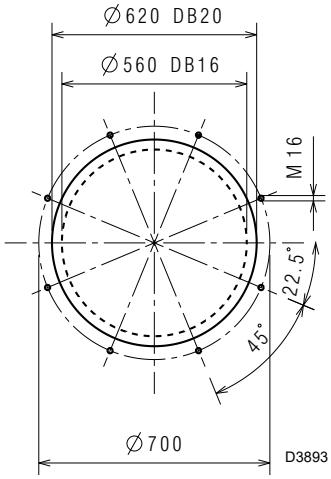

Gas feeding

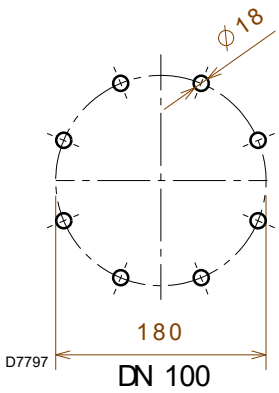

Fig. 2

3.8 Firing rate

The **MAXIMUM OUTPUT** is chosen from within the continuous diagram area (Fig. 3).

The **MINIMUM OUTPUT** should not be less than 4000 kW as shown in the diagram (Fig. 3).

WARNING

The firing rate value (Fig. 3) has been obtained considering an ambient temperature of 20 °C, an atmospheric pressure of 1013 mbar (approx. 0 m a.s.l.), and with the combustion head adjusted as shown on page 23.

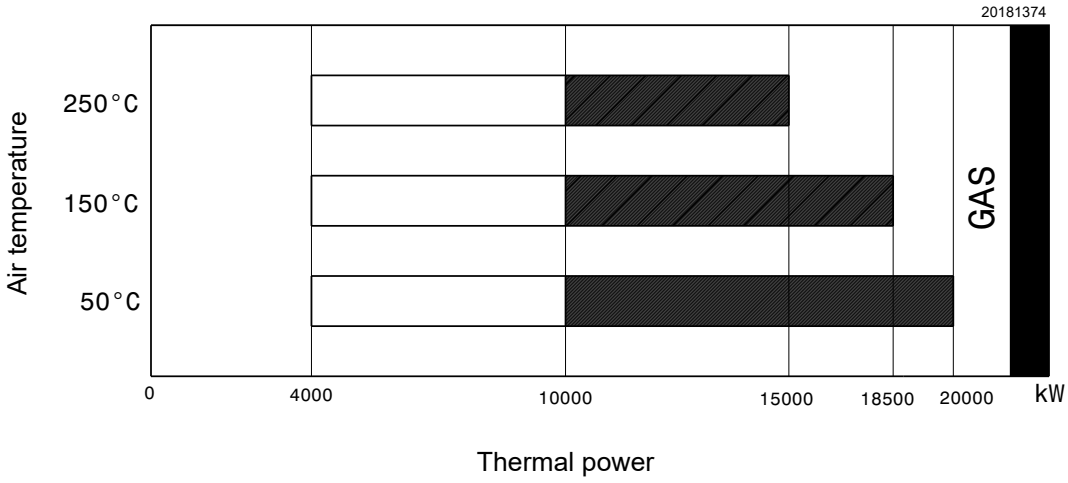

Fig. 3

3.9 Test boiler

The burner/boiler combination does not pose any problems if the boiler is EC approved and its combustion chamber dimensions are similar to those indicated in the diagram (Fig. 4).

If the burner must be combined with a boiler that has not been EC approved and/or its combustion chamber dimensions are clearly smaller than those indicated in the diagram, consult the manufacturer.

The firing rates were set in relation to special test boilers, according to EN 676 regulations.

In Fig. 4 you can see the diameter and length of the test combustion chamber.

Example:
Output 7000 kW - diameter 120 cm - length 6m

MODULATING RATIO

The modulating ratio, obtained in the test boilers in accordance with current standards (EN 676 for gas), is 1:4.

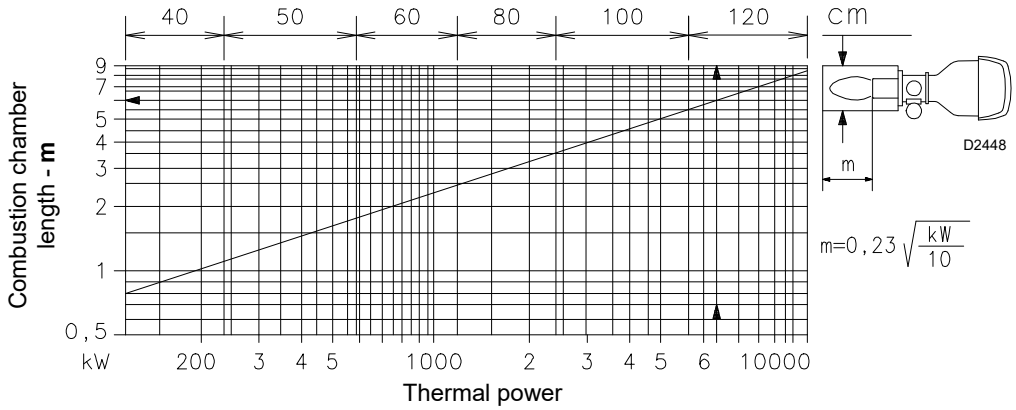

Fig. 4

3.10 Air side pressure drop (measured upstream of the damper with complete opening)

The pressure curves refer to the combustion head adjustment conditions. See on page 23. In the event that the supplied air has a temperature greater than 20°C and/or an altitude greater than 100 m. a.s.l., the pressure drops of the head shown in the diagram are multiplied by the coefficient $\mathbf{K_c}$ indicated in the table below.

Example

Burnt output = 9000 kW - Altitude = 750 m. a.s.l. - Combustion air temperature = 120 °C

From the diagram, for an output of 9000 kW, the total pressure drop obtained at the head is equal to: $\Delta\mathbf{p_{20}}$ **= 20 mbar** (combustion air at 20 °C and 100 m. a.s.l. altitude).

A multiplicative coefficient can be found on the table, for combustion air at 120 °C and at 750 m. a.s.l., equal to **Kc = 1.449**.

The total pressure drop of the burner head is:

$\Delta\mathbf{p} = \Delta\mathbf{p_{20}} \times \mathbf{K_c} = 20 \times 1.449 = 29$ mbar.

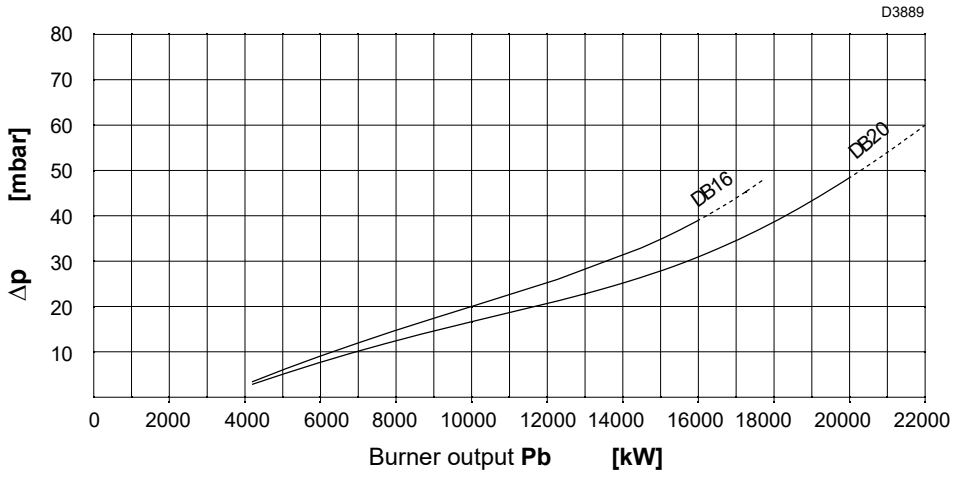

Fig. 5

Altitude	K_c Air temperature °C												
m. s.l.m.	0	20	40	60	80	100	120	140	160	180	200	220	250
0	0,920	0,988	1,055	1,122	1,190	1,257	1,325	1,392	1,459	1,527	1,594	1,662	1,763
100	0,932	1,000	1,069	1,137	1,205	1,273	1,342	1,410	1,478	1,547	1,615	1,683	1,786
500	0,976	1,047	1,119	1,190	1,262	1,333	1,405	1,477	1,548	1,620	1,691	1,763	1,870
750	1,007	1,080	1,154	1,228	1,302	1,375	1,449	1,523	1,596	1,670	1,744	1,818	1,928
1000	1,038	1,114	1,190	1,266	1,342	1,418	1,494	1,570	1,646	1,722	1,798	1,874	1,988
1250	1,069	1,147	1,226	1,304	1,382	1,460	1,539	1,617	1,695	1,774	1,852	1,930	2,048
1500	1,102	1,182	1,263	1,344	1,425	1,505	1,586	1,667	1,747	1,828	1,909	1,990	2,111
1750	1,130	1,213	1,295	1,378	1,461	1,544	1,626	1,709	1,792	1,875	1,957	2,040	2,164
2000	1,174	1,260	1,346	1,432	1,518	1,604	1,690	1,776	1,862	1,948	2,034	2,120	2,249
2250	1,206	1,294	1,382	1,471	1,559	1,647	1,736	1,824	1,912	2,001	2,039	2,177	2,310
2500	1,251	1,343	1,434	1,526	1,618	1,709	1,801	1,893	1,984	2,076	2,168	2,259	2,397
2750	1,284	1,378	1,472	1,566	1,660	1,754	1,848	1,942	2,036	2,130	2,224	2,318	2,460
3000	1,320	1,417	1,514	1,610	1,707	1,804	1,901	1,997	2,094	2,191	2,287	2,384	2,529

Tab. F

3.11 Gas side pressure drop

Gas pressure on the basis of the maximum output developed by the burner is given by the curves in Fig. 6.

It represents the pressure drop in the combustion head.

Natural gas G 20 - N.C.V.. = 10 kWh/Nm^3

The curves were taken in the following conditions:

- ➤ pressure measured at the test point on the pressure switch downstream from the gas butterfly valve;
- ➤ combustion chamber at 0 mbar;
- ➤ burner working at full output.

WARNING

Add the pressure of the combustion chamber in mbar to the value of the combustion head drop.

The pressure drop of the completely open butterfly valve is given in Fig. 7.

Combustion head pressure drop

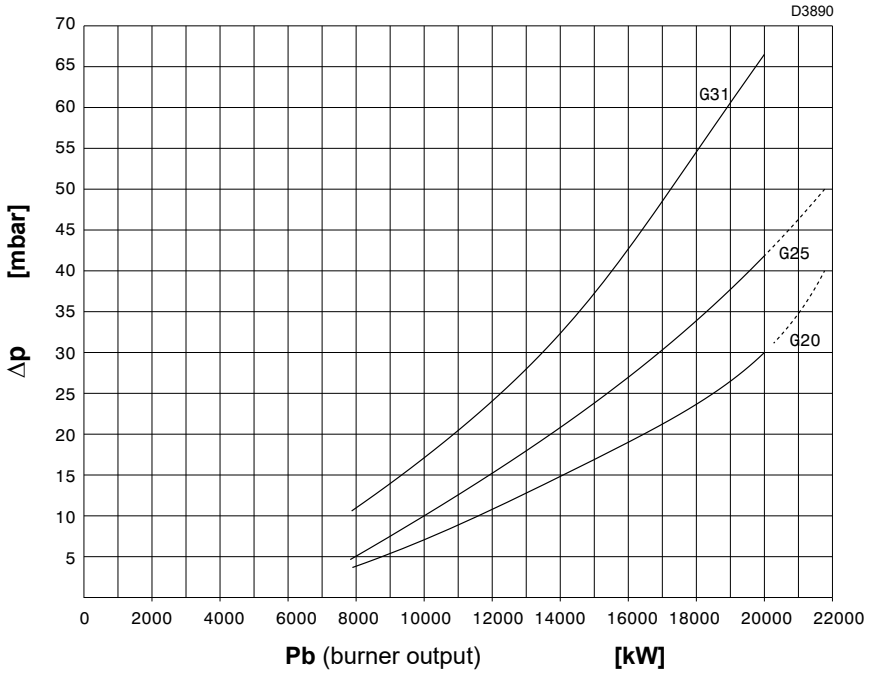

Fig. 6

Butterfly valve pressure drop

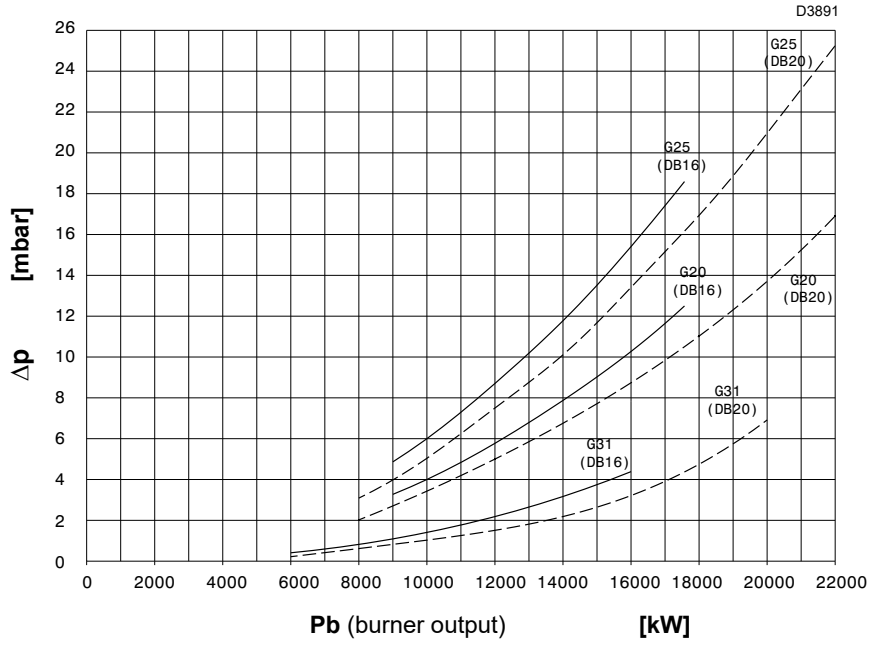

Fig. 7

3.12 Description of burner components

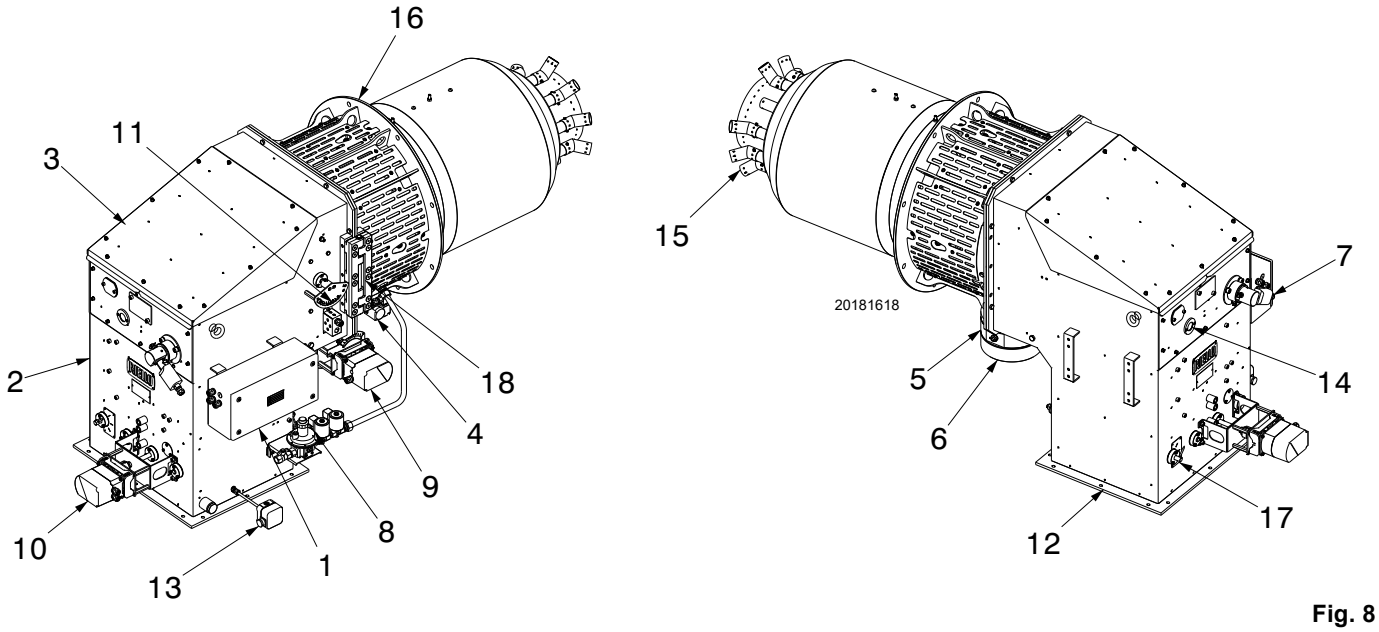

Fig. 8

1 Box with terminal board for electrical wiring
2 Air box
3 Cover
4 Maximum gas pressure switch
5 Gas output regulator
6 Gas train attachment flange
7 Flame sensor
8 Pilot burner gas train
9 Gas servomotor
10 Air servomotor
11 Air adjustment lever/graduate sector for combustion head
12 Air duct connection flange
13 Air pressure switch
14 Flame inspection window
15 Combustion head
16 Boiler connection flange
17 Air damper position indicator
18 Hinge

CAUTION

The burner can be opened to the right or to the left without links to the fuel supply side.

When the burner is closed, the hinge can be refitted on the opposite side.

3.13 Burner equipment

Gasket for gas train flange . . . . . No. 1
M16x70 gas train fastener screws . . . . . No. 8
Thermal insulation screen . . . . . No. 1
M16x50 screws to secure the burner to the boiler . . . . . No. 8
M16 Nut . . . . . No. 8
Washer D16 . . . . . No. 16
Gasket DN 100 . . . . . No. 1
Spare parts list . . . . . No. 1
Instructions . . . . . No. 1

3.14 Servomotor (SQM48.4....)

Warnings

WARNING

To avoid accidents, material or environmental damage, observe the following instructions!

Avoid opening, modifying or forcing the actuators.

➤ All interventions (assembly and installation operations, assistance, etc.) must be carried out by qualified personnel.
➤ Before modifying the wiring in the SQM4... system connection area, fully disconnect the burner control device from the power supply (omnipolar separation).
➤ To avoid the risk of electrocution, protect the connection terminals in a suitable manner and correctly fix the cover.
➤ Check the wiring is in order.
➤ Falls and collisions can negatively affect the safety functions. In this case, the unit must not be operated, even if it displays no evident damage.

Assembly notes

- Check the relevant national safety standards are respected.
- The connection between the actuator command shaft and the control element must be rigid, without any mechanical play.
- To avoid an excessive load on the bearings due to rigid hubs, the use of compensation clutches without any mechanical play is recommended (e.g. metal bellows-type clutches).

Installation notes

- Arrange the H.V. ignition cables separately, as far as possible from the control box and the other cables.
- To avoid the risk of electrocution, make sure that the 230V AC section of the SQM4... unit is fully separated from the functional low-voltage section.
- The static torque is reduced when the electrical supply of the actuator is switched off.
- The housing cover may only be removed for short periods of time for wiring or when making the addressing. In similar cases, make sure that dust or dirt does not penetrate inside the actuator.
- The actuator comprises a PCB with ESD-sensitive components.
- The top side of the board carries a cover which affords protection against direct contact. This protective cover must not be removed! The underside side of the board must not be touched.

WARNING

During the maintenance or replacement of the actuators, be careful not to invert the connectors.

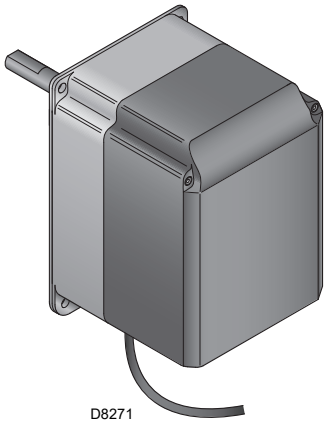

Fig. 9

Technical data

Operating voltage	AC 2 x 12 V via bus cable from the base unit or via a separate transformer
Safety class	extra low-voltage with safe isolation from mains voltage
Power consumption	26...34 VA
Degree of protection	to EN 60 529, IP 54, provided adequate cable entries are used
Cable connection	RAST3,5 connectors
Rotation direction	- Anticlockwise (standard) - Clockwise (inverted rotation)
Nominal torque (max)	20 Nm
Holding torque (max)	20 Nm
Running time (min.) for 90°	30 s.
Weight	approx. 1.6 kg
Environmental conditions:	
Operation	DIN EN 60 721-3-3
Climatic conditions	Class 3K3
Mechanical conditions	Class 3M3
Temperature range	-20...+60°C
Humidity	< 95% RH

Tab. G

4 Installation

4.1 Notes on safety for the installation

After carefully cleaning all around the area where the burner is to be installed, and arranging for the environment to be illuminated correctly, proceed with the installation operations.

DANGER

All the installation, maintenance and disassembly operations must be carried out with the electricity supply disconnected.

WARNING

The installation of the burner must be carried out by qualified personnel, as indicated in this manual and in compliance with the standards and regulations of the laws in force.

DANGER

Combustion air inside the boiler must be free from hazardous mixes (e.g.: chloride, fluoride, halogen); if present, it is highly recommended to carry out cleaning and maintenance more frequently.

4.2 Handling

The burner packaging includes a wooden platform, it is therefore possible to move the burner (still packaged) with a transpallet truck or fork lift truck.

WARNING

The handling operations for the burner can be highly dangerous if not carried out with the greatest attention: keep any unauthorised people at a distance; check the integrity and suitableness of the available means of handling.
Check also that the area in which you are working is empty and that there is an adequate escape area (i.e. a free, safe area to which you can quickly move if the burner should fall).
When handling, keep the load at not more than 20-25 cm from the ground.

After positioning the burner near the installation point, correctly dispose of all residual packaging, separating the various types of material.

CAUTION

Before proceeding with the installation operations, carefully clean all around the area where the burner will be installed.

4.3 Preliminary checks

Checking the consignment

CAUTION

After removing all the packaging, check the integrity of the contents. In the event of doubt, do not use the burner; contact the supplier.

The packaging elements (wooden cage or cardboard box, nails, clips, plastic bags, etc.) must not be abandoned as they are potential sources of danger and pollution; they should be collected and disposed of in the appropriate places.

Checking the characteristics of the burner

Check the identification label of the burner, showing:
- ➤ the model and code of burner (**A**)(Fig. 10);
- ➤ the year of manufacture, in cryptographic form (**C**);
- ➤ the data for electrical supply and the protection level (**D**);
- ➤ the types of gas used and the relative supply pressures (**E**);
- ➤ the data of the burner's possible minimum and maximum output (**F**) (see Firing rate).
  Warning. The burner output must be within the boiler's firing rate.

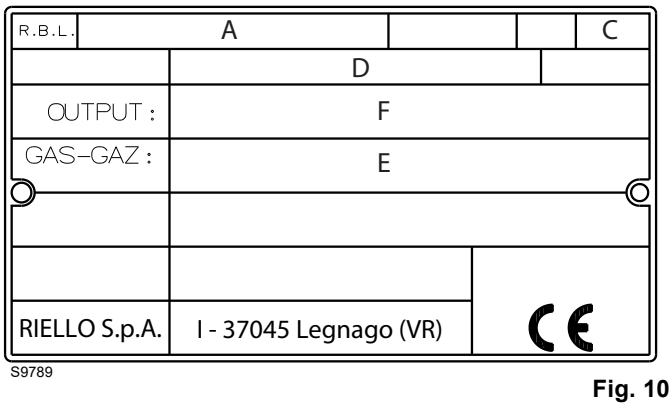

Fig. 10

WARNING

A burner label that has been tampered with, removed or is missing, along with anything else that prevents the definite identification of the burner makes any installation or maintenance work difficult.

4.4 Operating position

WARNING

- The burner is set up to work only in positions **1** and **4** (Fig. 11).
- Installation **1** is preferable, as it is the only one that allows the maintenance operations as described in this manual.
- The installation **4** permits the operation, but makes maintenance and inspection operations of the combustion head more difficult.

DANGER

- Any other position could compromise the correct operation of the appliance.
- Installation **5** is prohibited for safety reasons.

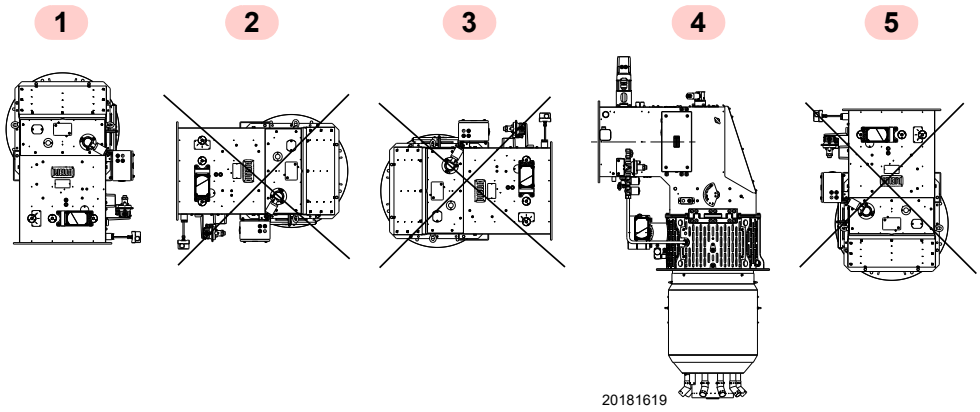

Fig. 11

4.5 Removing the shutter lockout screws

Remove the screws 1)-2) and nuts before fitting the burner onto the boiler (Fig. 12).

Replace them with the screws 3) M8x20 supplied as standard.

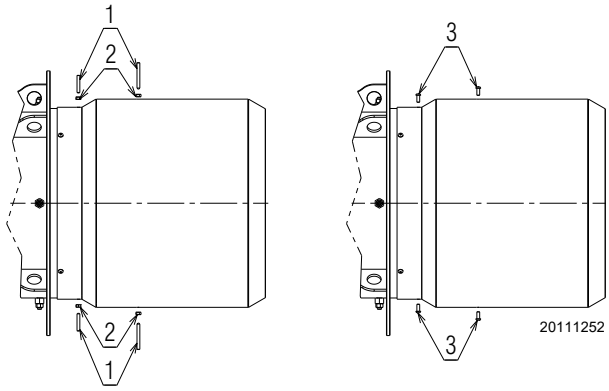

Fig. 12

4.6 Preparing the boiler

4.6.1 Boring the boiler plate

Pierce the closing plate of the combustion chamber, as in Fig. 13. The position of the threaded holes can be marked using the thermal insulation screen supplied with the burner.

4.6.2 Blast tube length

The length of the blast tube must be selected according to the indications provided by the manufacturer of the boiler, and in any case it must be greater than the thickness of the boiler door complete with its fettling.

For boilers with front flue passes (Fig. 15), or with a flame inversion chamber, a protection in refractory material must be made to allow the blast tube to be extracted.

For boilers with a water-cooled frontal, a refractory lining is not necessary unless expressly requested of the boiler manufacturer.

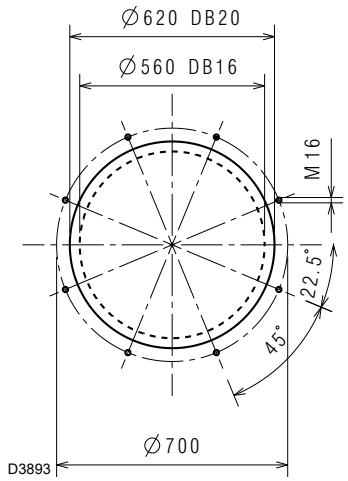

Fig. 13

4.7 Lifting points

Prepare a suitable lifting system using the rings shown in Fig. 14.

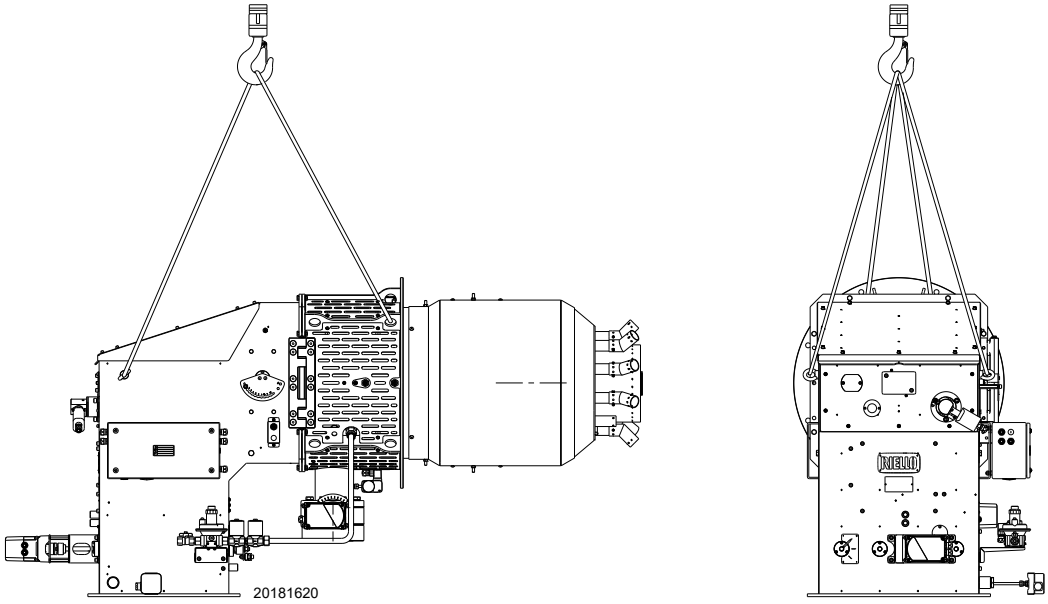

Fig. 14

4.8 Boiler fixing

Fig. 15 indicates how to attach the burner to a boiler equipped with a non-cooled frontal piece.

It is recommended that the head protrusion should not exceed 200 mm. However, the refractory wall must not extend beyond the end of the combustion head of the burner.

WARNING

The seal between burner and boiler must be airtight.

Model	MIN (mm)	MAX (mm)
DB 20 SE FGR	360	560

Tab. H

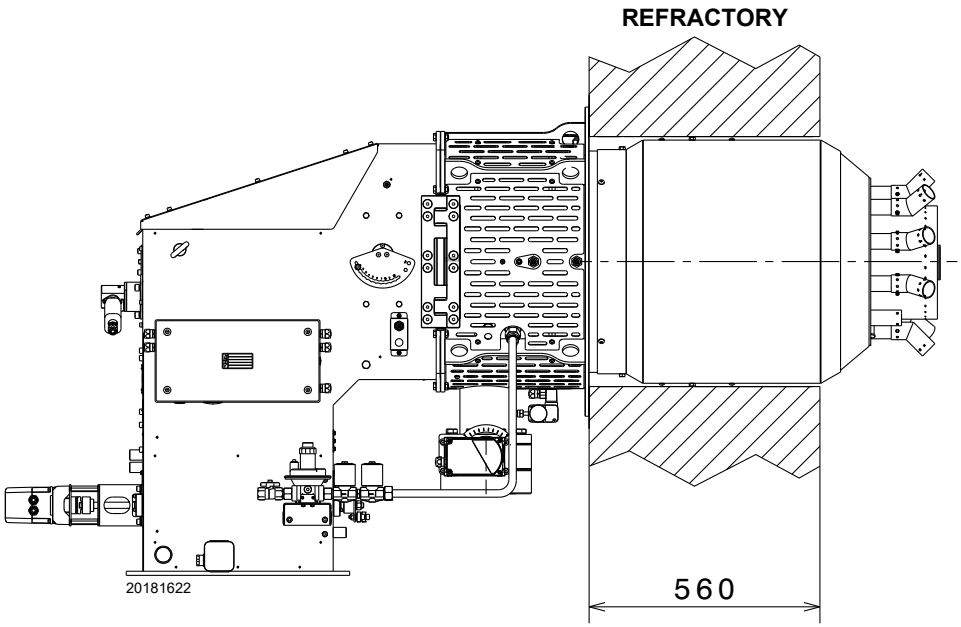

Fig. 15

4.9 Access to head internal part

In order to reach inside the combustion head (Fig. 16) proceed as follows:

- ➤ remove the cover of the air conveyor 1) and the plate 3);
- ➤ remove the flame sensor 2);
- ➤ remove the electrical wiring 4)of the pilot;
- ➤ remove the ignition pilot 5) after unscrewing the nut 6);
- ➤ unscrew the fixing screws 7) of the head 8);
- ➤ remove the head 8).

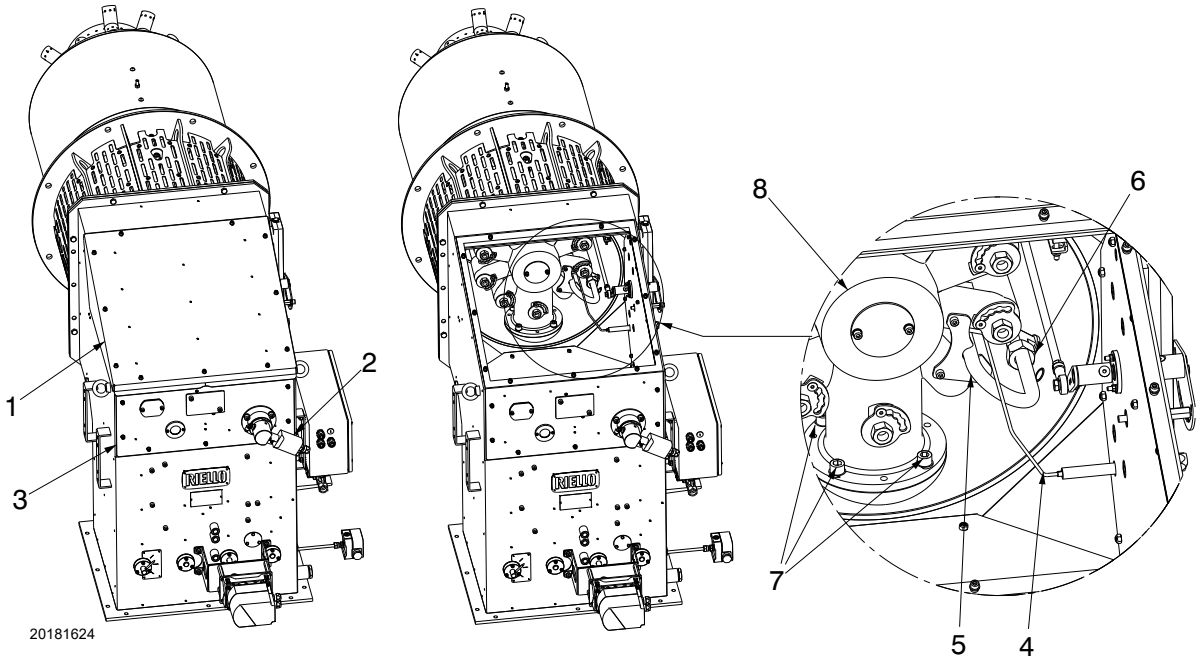

Fig. 16

4.10 Electrode positioning

WARNING

Position the electrode at a distance of 2 - 3 mm from the hole, as shown in Fig. 17.

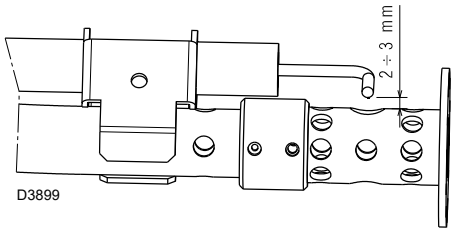

Fig. 17

4.11 FGR duct system

– Normally the duct would connect to the stack as shown in Fig. 18, with a 45° cut facing the flue gas flow and with the center of the cut centered in the stack.
The duct could be made to the smoke box, but must still be located with the same 45° cut facing the flue gas flow stream and with the center of the cut in the center of the stream.

– The duct should be routed in a manner that has the minimum number of elbows and provides for the normal expansion and contraction of the piping.
Long duct runs can change length by over 1” and can put an extreme load on the connecting points that could cause component failures.
The design must include offsets that will allow for the required movement of the piping without undue force on the burner or stack.

– Duct expansion and contraction can be managed by using two relatively long duct runs that are 90° apposed to each other.
A small movement in the angle between these two legs will provide the space needed to absorb the expansion and contraction. The ends of the FGR duct must be securely attached to allow this to work properly, and prevent high loads from being applied to the burner or stack.

– A condensation drip leg must be provided upstream of the FGR control valve and the FGR shut-off valve (if used). There must be sufficient condensate drip legs and catch space (volume of drip legs) to prevent the condensation from flowing through the control valves and into the fan.
In cases of heavy condensation, a condensate drip leg may be required on the bottom of the housing, to remove condensate.

– Determine if pipe reducers are needed for the connection to the FGR control valve and the FGR shut-off valve.

– The duct must be properly supported, handling both the weight of the duct and to control the thermal expansion and contraction. The supports may need to be anchored to provide this stability in the FGR duct.

CAUTION

Uncontrolled condensation can cause premature failure of the control valves, fan and motor.

Adequate means must be provided to remove condensation from the system.

Cold startup will generate significant amounts of condensation.

– The FGR duct is normally made from a DN250 pipe because it is easily obtainable and inexpensive.
DN200 pipe can also be used for this application.

– The duct components must be seal welded, flanged or screwed together to provide an air tight duct.
Air leakage into the duct will prevent the system from working properly. It is sufficient to only inspect the welds for a proper seal, they do not need to be leak tested.

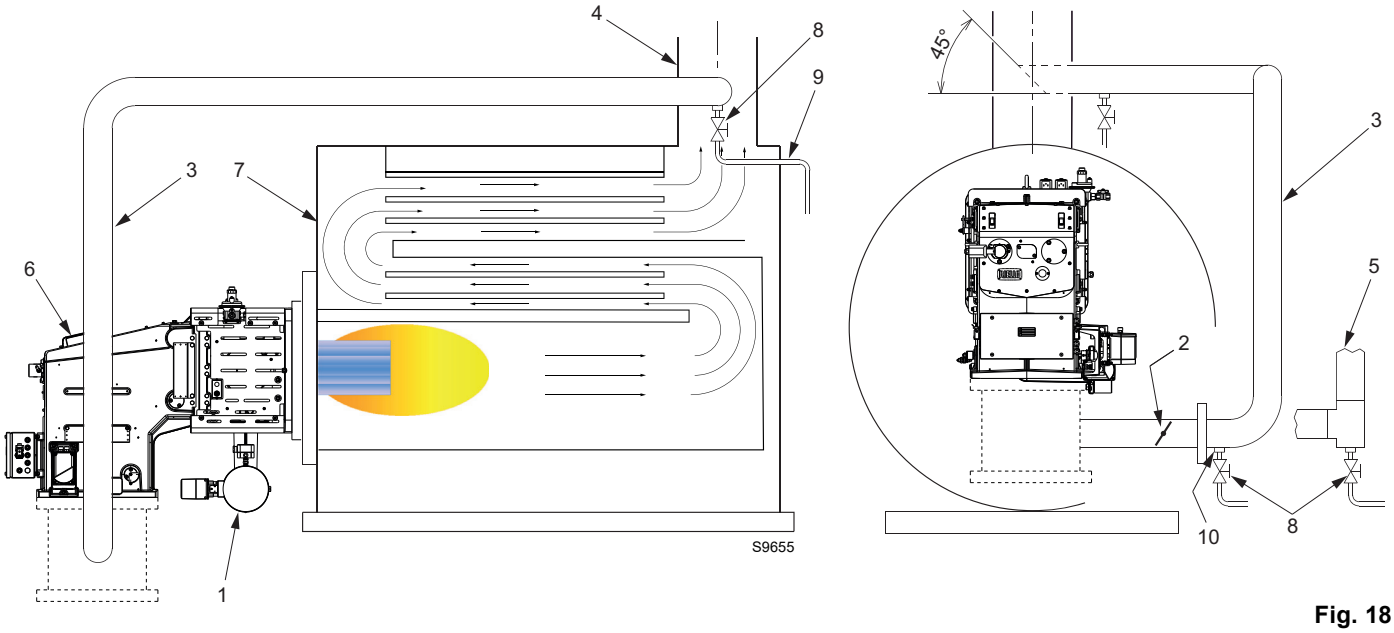

Fig. 18

Key (Fig. 18)
1 Primary gas supply inlet
2 Inducted FGR modulating damper
3 Flue gas recirculation pipe
4 Boiler stack
5 Alternate construction using “T”
6 Burner
7 Boiler
8 Drain valve (manual ball valve, stainless steel)
9 Drain line
10 Condensate trap

4.12 Gas feeding

Explosion danger due to fuel leaks in the presence of a flammable source.

Precautions: avoid knocking, attrition, sparks and heat.

Make sure the fuel interception tap is closed before performing any operation on the burner.

WARNING

The fuel supply line must be installed by qualified personnel, in compliance with current standards and laws.

4.12.1 Gas feed connection to the burner

Burner connection

The burner connection to the gas train is carried out by way of attachment to the flange.

The dimensions of the flange are shown in Fig. 2 on page 8.

Use the relative adapters to connect the gas flange to the train, supplied as accessories.

Pilot burner connection

The burner is fitted with a dedicated gas train that is fixed above the pipe coupling.

It should be connected to the main train downstream the filter or the pressure adjuster (depending on configuration).

Fig. 19 shows the natural gas version.

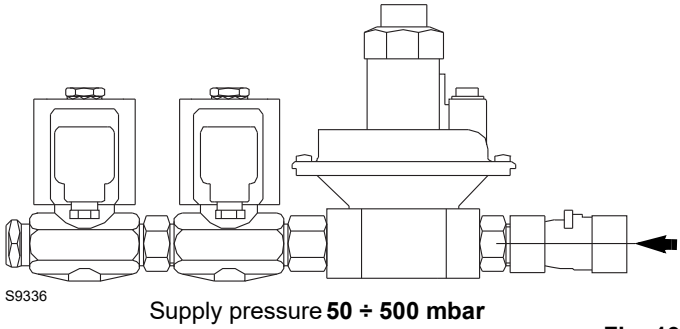

Supply pressure **50 ÷ 500 mbar**

Fig. 19

4.12.2 General gas supply layout (example)

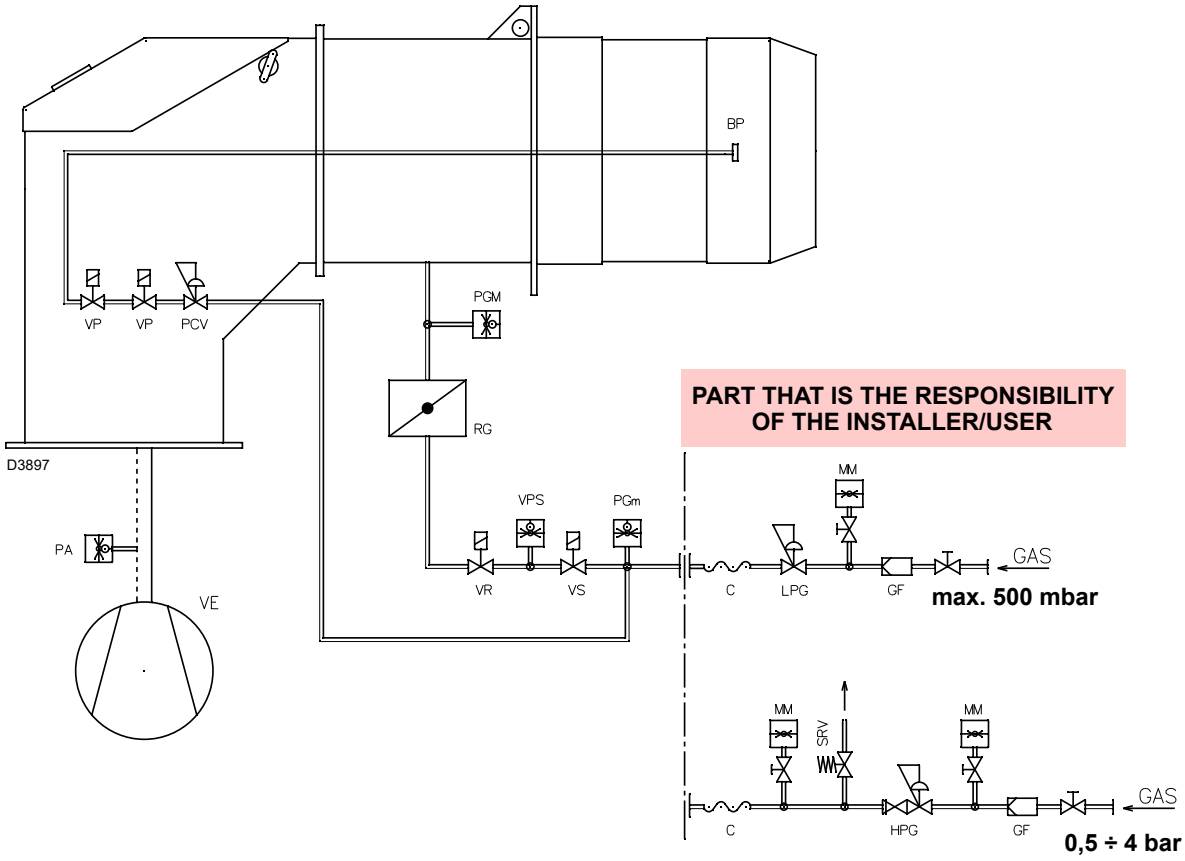

Fig. 20

Key (Fig. 20)

BP	Pilot burner
C	Vibration damping joint
GF	Gas filter
HPG	High gas pressure regulator
LPG	Low gas pressure regulator
MM	Pressure gauge
PA	Minimum air pressure switch
PCV	Pilot gas pressure regulator
PGM	Maximum gas pressure switch
PGm	Minimum gas pressure switch
RG	Gas butterfly valve
SRV	Pressure limiting valve with outlet into the environment
VE	Fan
VP	Pilot solenoid valves
VPS	Leak detection control device
VR	Gas pressure regulator solenoid valve
VS	Gas safety solenoid

4.12.3 Gas train

Approved according to standard EN 676 and provided separately from the burner.

To select the correct gas train model, refer to the supplied "Burner-gas train combination" manual.

4.12.4 Gas train installation

Disconnect the electrical power using the main switch.

Check that there are no gas leaks.

Pay attention when handling the train: danger of crushing of limbs.

Make sure that the gas train is properly installed by checking for any fuel leaks.

The operator must use the required equipment during installation.

The gas train is set up to be connected to the burner by the flange 2)(Fig. 13).

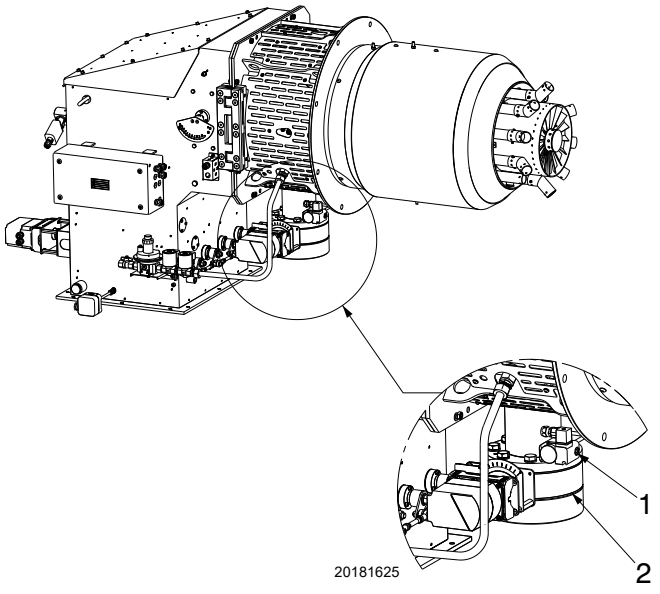

Fig. 21

4.12.5 Gas pressure

Tab. I indicates the pressure drops of the combustion head and gas butterfly valve, on the basis of the burner operating output.

kW	**1** Δp (mbar)		**2** Δp (mbar)	
	G 20	G 25	G 20	G 25
8000	4,8	6,7	2,2	3,2
9000	6,1	8,5	2,8	4,1
10000	7,5	10,5	3,5	5,0
11000	9,1	12,7	4,2	6,1
12000	10,8	15,1	5,0	7,2
13000	12,7	17,7	5,9	8,5
14000	14,7	20,6	6,9	9,8
15000	16,9	23,6	7,9	11,3
16000	19,2	26,9	9,0	12,8
17000	21,7	30,3	10,1	14,5
18000	24,3	34,0	11,3	16,2
19000	27,1	37,9	12,9	18,1
20000	30,0	42,0	4,0	20,0

Tab. I

The values shown in Tab. I refer to:
– Natural gas G 20 NCV 9.45 kWh/Sm^3 (8.2 Mcal/Sm^3);
– Natural gas G 25 NCV 8.13 kWh/Sm^3 (7.0 Mcal/Sm^3).

Column 1

Combustion head pressure drop.
Gas pressure measured at test point 1)(Fig. 21), with:
- combustion chamber at 0 mbar;
- burner working at maximum modulating output;
- combustion head set as on page 23.

Column 2

Pressure loss at gas butterfly valve 2)(Fig. 21) with maximum opening: 90°.

To calculate the approximate output at which the burner operates:
– subtract the pressure in combustion chamber from the gas pressure measured at test point 1)(Fig. 21);
– find, in Tab. I related to the burner concerned, the pressure value closest to the result of the subtraction;
– read off the corresponding output on the left.

The data of thermal output and combustion head gas pressure are related to full open (90°) gas butterfly valve.

Example with natural gas G20:
Operation at maximum modulating output
Gas pressure at test point 1)(Fig. 21) = 17.7 mbar
Pressure in combustion chamber = 5 mbar
17.7 - 5 = 12.7 mbar

A pressure of 12.7 mbar, column 1, corresponds in Tab. I to an output of 13000 kW.

This value serves as a rough guide; the effective output must be measured at the gas meter.
To calculate the required gas pressure at test point 1)(Fig. 21), set the maximum modulating output required from the burner operation:
– find the nearest output value in Tab. I for the burner in question.
– read, on the right (column 1), the pressure at the test point 1)(Fig. 21).
– Add this value to the estimated pressure in combustion chamber.

Example with natural gas G20:
Operation at maximum modulating output
Gas pressure at an output of 13000 kW = 12.7 mbar
Pressure in combustion chamber = 5 mbar
12.7 + 5 = 17.7 mbar
pressure required at test point 1)(Fig. 21).

4.12.6 Pilot - gas train connection

The burner is fitted with a dedicated gas train that is fixed to the pipe coupling.
➤ It should be connected to the main train downstream the filter or the pressure adjuster (depending on configuration).

Supply pressure 68 ÷ 500 mbar.

4.13 Electrical wiring

Notes on safety for the electrical wiring

DANGER

- The electrical wiring must be carried out with the electrical supply disconnected.
- Electrical wiring must be made in accordance with the regulations currently in force in the country of destination and by qualified personnel. Refer to the wiring diagrams.
- The manufacturer declines all responsibility for modifications or connections different from those shown in the wiring diagrams.
- Check that the electrical supply of the burner corresponds to that shown on the identification label and in this manual.
- The burner has been designed for intermittent use.
  This means they should compulsorily be stopped at least once every 24 hours to enable the control box to perform checks of its own start-up efficiency. Normally, burner stopping is guaranteed by the boiler's thermostat/pressure switch. If this is not the case, a time switch should be fitted in series to TL to stop the burner at least once every 24 hours. Refer to the wiring diagrams.
- The electrical safety of the device is obtained only when it is correctly connected to an efficient earthing system, made according to current standards. It is necessary to check this fundamental safety requirement. In the event of doubt, have the electrical system checked by qualified personnel. Do not use the gas tubes as an earthing system for electrical devices.
- The electrical system must be suitable for the maximum power absorption of the device, as indicated on the label and in the manual, checking in particular that the section of the cables is suitable for that level of power absorption.
- For the main power supply of the device from the electricity mains:
  - do not use adapters, multiple sockets or extensions;
  - make provisions for an omnipolar switch with a gap between the contacts of at least 3 mm (over-voltage category III), as required by current safety regulations.
- Do not touch the device with wet or damp body parts and/or in bare feet.
- Do not pull the electric cables.

Before carrying out any maintenance, cleaning or checking operations:

DANGER

Turn off the burner's power supply using the main system switch.

DANGER

Turn off the fuel interception tap.

DANGER

Avoid condensate, ice and water leaks from forming.

If the cover is still present, remove it and proceed with the electrical wiring according to the wiring diagrams.

Use flexible cables in compliance with the EN 60 335-1 standard.

After carrying out maintenance, cleaning or checking operations, reassemble the cover and all the safety and protection devices of the burner.

4.13.1 Supply cables and external connections passage

All the cables to be connected to the burner are passed through cable grommets, making holes on the electric box or else using the holes that have a plug, as shown in Fig. 22.

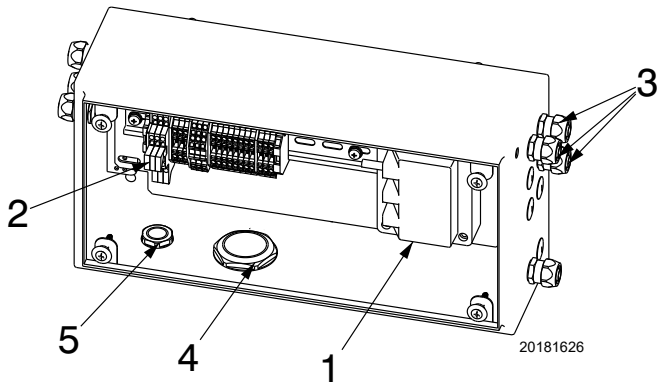

Fig. 22

Key (Fig. 22)
1 Ignition transformer
2 Terminal board and fuses
3 Burner connections outputs
4 Plugs for external inputs
5 CANbus plugs for external inputs

DANGER

Before making any connections, check the electrical system in the appendix of this instruction booklet.

5 Start-up, calibration and operation of the burner

5.1 Notes on safety for the first start-up

WARNING

The first start-up of the burner must be carried out by qualified personnel, as indicated in this manual and in compliance with the standards and regulations of the laws in force.

WARNING

Check the correct working of the adjustment, command and safety devices.

WARNING

Refer to paragraph “Safety test - with gas ball valve closed” on page 29 before the first start-up.

5.2 Combustion head adjustment

In order to optimise performance, the burner is equipped with a variable geometry combustion head which operates on the basis of the delivered output.

The device is connected to the lever (Fig. 23) and by way of leverage transmits the axial movement to the cylinder located in the combustion head.

Before starting up the burner, it is advisable to choose the mobile cylinder stroke on the basis of the maximum output range that the burner should deliver.

The factory regulation corresponds to the maximum output (coupling position: 1).

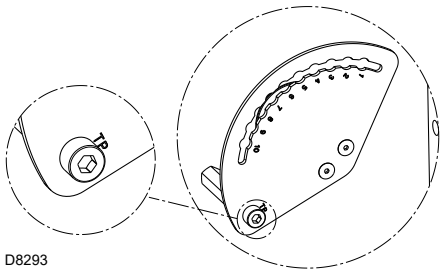

Fig. 23

Procedure for combustion head adjustment

1 Remove the cover from the burner's air box.
2 With the help of establish in which hole of the lever B) (Fig. 24) the articulated coupling A) solidly joined to the shutter should be inserted.
3 Fix the articulated coupling to the previously established hole.
4 Close the cover.

Coupling position	DB 20 Potenza (kW)
1	12000
2	16000
3	20000

Tab. J

The required maximum output is defined by the choice of the hole to be used on the external lever (Fig. 23).

In factory, the adjustment is set to TP position (transport position) (see Fig. 23).

Coupling position	Output (kW)	
	From	To
1	3000	4000
2	4000	4700
3	4700	6000
4	6000	8500
5	8500	10500
6	10500	12500
7	12500	15000
8	15000	16500
9	16500	18000
10	18000	20000

Tab. K

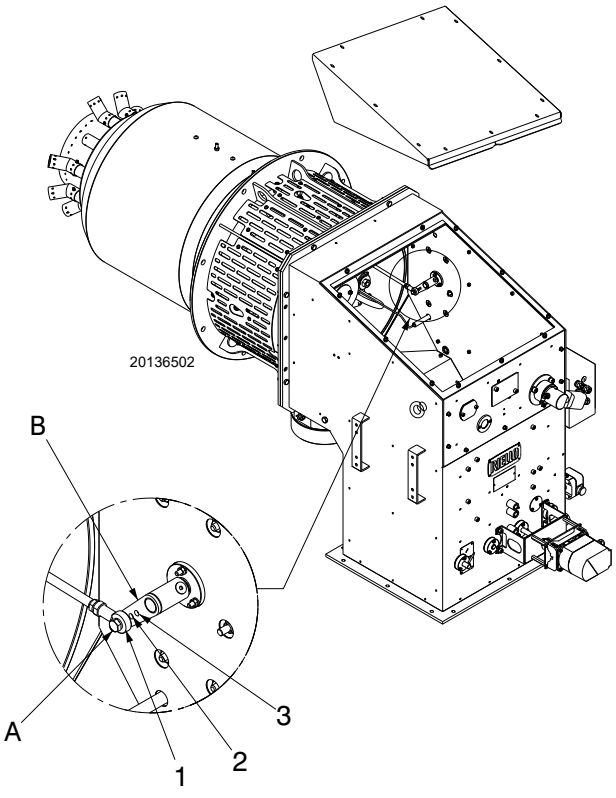

Fig. 24

5.3 Adjustments prior to ignition

In addition, the following adjustments must also be made:

- ➤ Slowly open the manual valves situated upstream from the gas train.
- ➤ Adjust the minimum gas pressure switch (Fig. 29 on page 27) to the start of the scale.
- ➤ Adjust the maximum gas pressure switch (Fig. 28 on page 27) to the end of the scale.
- ➤ Adjust the air pressure switch (Fig. 27 on page 27) to the start of the scale.
- ➤ Purge the air from the gas line.
  We recommend using a plastic tube routed outside the building and to purge air until gas is smelt.
- ➤ Fit a U-type pressure gauge or a differential pressure gauge (Fig. 25), with socket (+) on the gas pressure of the pipe coupling and (-) in the combustion chamber.
  The manometer readings are used to calculate MAX burner output.
- ➤ Connect two lamps or testers to the two gas line solenoids to check the exact moment in which voltage is supplied. This operation is unnecessary if each of the two solenoid valves is equipped with a pilot light that signals voltage passing through.

CAUTION

Before starting up the burner, it is good practice to adjust the gas train so that ignition takes place in conditions of maximum safety, i.e. with gas delivery at the minimum.

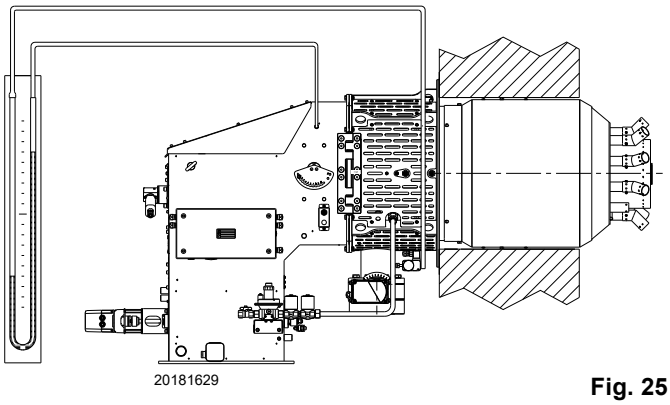

Fig. 25

5.4 Burner start-up

Close the remote controls and put the selector on the boiler's main panel to "**ON**".

Make sure that the lights or testers connected to the solenoids, or the pilot lights on the solenoids themselves, indicate that no voltage is present. If voltage is present, stop the burner immediately and check the electrical connections.

When the limit thermostat (TL) closes, the "**CALL FOR HEAT**" signal must come on (if present on the main panel) and the burner will begin its starting cycle.

5.5 Ignition pilot burner

For correct functioning, adjust the gas pressure (measured on the socket located on the valve) to between 30 ÷ 50 mbar.

Gas	mbar	Sm^3/h
G20	1.5	12.3
G31	1.4	3.2

Tab. L

WARNING

Before starting the main burner, make sure that the pilot flame is stable, checking the value of the flame signal on the AZL display on the boiler's main panel.

Continue with the burner ignition procedure, checking that the pilot has come on correctly.

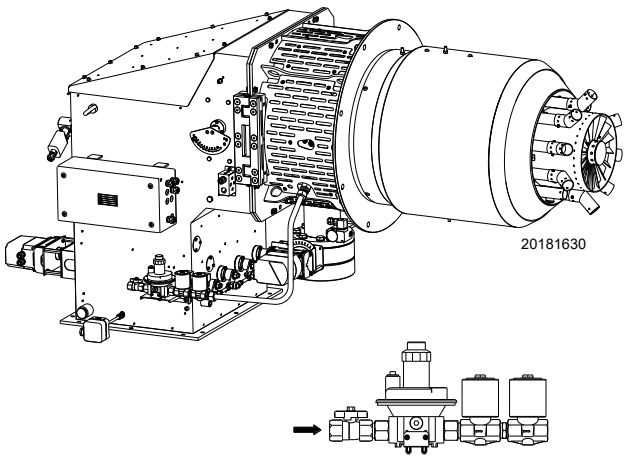

Fig. 26

5.6 Burner ignition

The burner should light after having performed the above steps.

If after completing the starting cycle the flame does not appear and the control box goes into lockout, reset it and wait for a new ignition attempt.

If ignition is still not achieved, it may be that gas is not reaching the combustion head within the safety time period of 3 seconds; In this case increase gas ignition delivery.

The arrival of gas at the pipe coupling is evidenced by the U-shaped pressure gauge (Fig. 25) or else with the aid of a digital pressure gauge placed on the pressure test point under the coupling.

If further burner lockouts occur, refer to the "Reset procedure" in the equipment manual supplied. with the boiler's main panel. Once the burner has fired, now proceed with global calibration operations.

5.7 Combustion air adjustment

Fuel/combustion air synchronisation is done with the relevant servomotors (air and gas) by logging a calibration curve by means of the electronic cam.

It is advisable, to reduce the loss and for a wide calibration field, to adjust the servomotors to the maximum of the output used, the nearest possible to the maximum opening (90°).

On the gas butterfly valve, fuel step according to the burner output required, with servomotor completely open, is carried out by the pressure stabiliser placed on the gas train.

The values shown in Tab. M can be used as a reference for calibrating the combustion well.

EN 676		Air excess		CO
		Max. output. $\lambda \leq 1.2$	Max. output. $\lambda \leq 1.3$	
GAS	Theoretical max CO_2 0 % O_2	CO_2 % Calibration		mg/kWh
		$\lambda = 1.2$	$\lambda = 1.3$	
G 20	11.7	9.7	9	≤ 100
G 25	11.5	9.5	8.8	≤ 100
G 30	14.0	11.6	10.7	≤ 100
G 31	13.7	11.4	10.5	≤ 100

Tab. M

5.7.1 Air / gas adjustment and output modulation

The burner system for air/fuel adjustment and power modulation performs - in one single control device - a series of integrated functions to obtain optimal energy/operating efficiency from the burner, both for single operation and when combined with other units (e.g. double furnace boiler or several generators working in parallel).

The basic system functions control:

1 The dosage of the air and fuel through positioning using direct servo-commands of the relevant valves eliminating the possible play in the calibration systems with mechanical cam levers, used on traditional modulating burners;
2 The modulation of the burner output in accordance with the load required by the system, with maintenance of the pressure or temperature of the boiler at the operating values set
3 the fine, continuous adjustment of the air flow rate according to the gas analysis made at the flue (O2); this function is dependent on the presence of the O2 kit, containing the PLL module and the QGO2 sensor;
4 the measurement of the combustion yield (this function requires the O2 kit);
5 the sequence (cascade adjustment) of several boilers, suitably connected.

Further interfaces and communication functions with computers, for remote control or integration in central supervision systems are available on the basis of the configuration of the system.

WARNING

The first start up and every further internal setting operation of the adjustment system or the expansion of the base functions require access by means of password and are to be carried out by service personnel who are especially trained for the internal programming of the instrument and the specific application created with this burner.

The first start-up and curve synchronisation manual is supplied with the burner.

At request, the complete manual for the control and setting of all parameters is available.

5.8 FGR commissioning

The flue gas recirculation (FGR) function is used to reduce the NOx content of flue gases. This is accomplished by feeding a certain proportion of the flue gas back to the combustion chamber, causing the flame's temperature to drop. The amount of recirculated flue gas is set via auxiliary actuator 3.

When making the setting, it must be observed that excessive amounts of recirculated flue gas can cause the flame to lift off the burner's head (stability limit of flame).

NOTE:

Reduction of maximum burner output

Use of the flue gas recirculation (FGR) function or the flue gas mass introduced to the supply air duct might lower the burner's maximum output.

This means that the maximum amount of combustion air that can be introduced will be reduced.

Hence, the amount of fuel for high-fire operation must be reduced to ensure correct combustion values.

The control box supports flue gas recirculation (FGR) function: flue gas recirculation (FGR) without temperature compensation (operating mode flue gas recirculation (FGR) = time or temperature).

With these operating principles, the positions of auxiliary actuator 3 can only change between CLOSED (ignition position) and the positions on the ratio control curves.

First time set up

Commission the plant with no influence from flue gas recirculation (FGR).

Factory preset: FGR-Mode = AUX3onCurve

Flue gas recirculation (FGR) function is deactivated.

(Auxiliary actuator 3 is driven along its parameterized ratio control curve)

This enables the fuel-air ratio control system to be set as if the plant operated without flue gas recirculation (FGR).

For that purpose, in flue gas recirculation (FGR) mode Time, set the switch-on time to its maximum or parameterize it at such a level that auxiliary actuator 3 will not be positioned until the curve settings become active.

Analogously, in flue gas recirculation (FGR) mode Temperature, set the switch-on temperature to a level that cannot be reached.

After completing the settings of the fuel-air ratio control curves without flue gas recirculation (FGR), the actual settings with an active auxiliary actuator 3 can now be made.

Since this might have an impact on the combustion settings, the fuel- and air-regulating actuators may have to be readjusted.

First time FGR set up

Modify the factory preset: FGR-Mode = time (Auxiliary actuator 3 is held in the ignition position until an adjustable time is reached).

We suggest to use a value from 5-15 minutes for first time FGR commissioning.

Check value of temperature of flue gas recirculation (FGR). It must be 120-130 °C to reduce condensation in burner or intake duct.

Operation FGR set up

Modify the factory preset: FGR-Mode = temperature (Auxiliary actuator 3 is held in the ignition position until an adjustable temperature is reached.).

After first time FGR commissioning, we suggest to use this setting using a temperature sensor in FGR duct.

We suggest to use previous value of temperature measured during first time commissioning.

In case of use the FGR-Mode = time, make sure that the flue gas temperature reaches the value within the set time.

FGR temperature sensor

FGR-Mode: PT 1000 temperature probe is connect to X11 terminal (see electrical connection)

You can connect 2 probes in X10 terminal together:

Factory pre-set:
PT100 for boiler temperature (customer installation)
PT1000 for FGR-sensor (already connected)

You can't use PT1000 probe for boiler temperature when it's used as FGR sensor. But you can use other type of connection.

Check air temperature where is mounted flame sensor.

If temperature is more than 50-60°, it's mandatory air cooling using burner air-intake.

While burner is working with FGR, it's possible reach high surface temperature.

5.9 Pressure switch adjustment

5.9.1 Air pressure switch

Adjust the air pressure switch after performing all other burner adjustments with the air pressure switch set to the start of the scale (Fig. 27).

With the burner operating at MAX. output, increase adjustment pressure by slowly turning the relative knob clockwise until the burner locks out.

Then turn the knob anti-clockwise by about 20% of the adjusted value and check the burner starts up correctly.

If the burner locks out again, turn the knob anti-clockwise a little bit more.

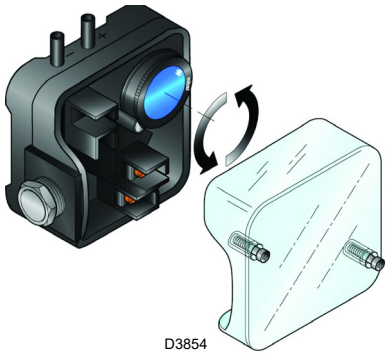

Fig. 27

WARNING

In conformity with current standards, the air pressure switch must prevent the CO in the flue gases exceeding 1% (10,000 ppm).

5.9.2 Maximum gas pressure switch

Adjust the maximum gas pressure switch after having performed all the other burner adjustments with the maximum gas pressure switch set at the end of the scale (Fig. 28).

With the burner operating at MAX output, reduce the adjustment pressure by slowly turning the adjustment knob anticlockwise until the burner locks out.

Turn the knob clockwise by 0.2 kPa (2 mbar) and repeat the start-up of the burner.

If the burner locks out again, turn the knob again clockwise by 0.1 kPa (1 mbar).

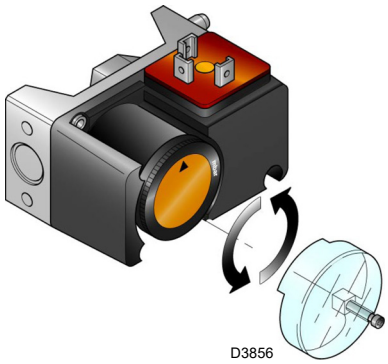

Fig. 28

5.9.3 Minimum gas pressure switch

Adjust the minimum gas pressure switch after performing all the other burner adjustments with the pressure switch set to the start of the scale (Fig. 29).

With the burner operating at maximum output, increase adjustment pressure by slowly turning the relative knob clockwise until the burner locks out.

Then turn the knob anticlockwise by 0.2 kPa (2 mbar) and repeat the burner start-up to ensure it is operating regularly.

If the burner locks out again, turn the knob anticlockwise again by 0.1 kPa (1 mbar).

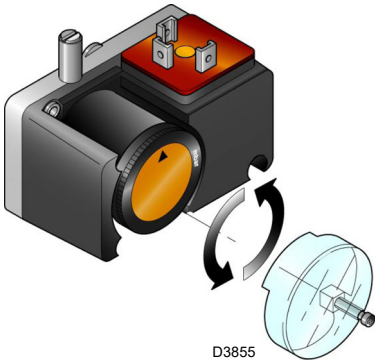

Fig. 29

WARNING

1 kPa = 10 mbar

5.10 Final checks (with burner operating)

➤ Open the thermostat/pressure switch TL ➤ Open the thermostat/pressure switch TS	⇨	The burner must stop
➤ Turn the gas maximum pressure switch knob to the minimum end of scale position ➤ Turn the air pressure switch to the maximum end of scale position	⇨	The burner must stop in lockout
➤ Turn off the burner and cut off the power ➤ Disconnect the minimum gas pressure switch connector	⇨	The burner must not start
➤ Disconnect the flame sensor wire	⇨	The burner must stop in lockout due to ignition failure

Tab. N

WARNING

Make sure that the mechanical locking systems on the various adjustment devices are fully tightened.

6 Maintenance

6.1 Notes on safety for the maintenance

The periodic maintenance is essential for the good operation, safety, yield and duration of the burner.

It allows you to reduce consumption and polluting emissions and to keep the product in a reliable state over time.

DANGER

The maintenance interventions and the calibration of the burner must only be carried out by qualified, authorised personnel, in accordance with the contents of this manual and in compliance with the standards and regulations of current laws.

Before carrying out any maintenance, cleaning or checking operations:

DANGER

Turn off the burner's power supply using the main system switch.

DANGER

Turn off the fuel interception tap.

Wait for the components in contact with heat sources to cool down completely.

6.2 Maintenance programme

6.2.1 Maintenance frequency

The gas combustion system should be checked at least once a year by a representative of the manufacturer or another specialised technician.

6.2.2 Safety test - with gas ball valve closed

It is fundamental to ensure the correct execution of the electrical connections between the gas solenoid valves and the burner to perform safely the commissioning.

For this purpose, after checking that the connections have been carried out in accordance with the burner's electrical diagrams, an ignition cycle with closed gas ball valve -dry test- must be performed.

1 The manual ball gas valve must be closed
2 The electrical contacts of the burner limit switch need to be closed
3 Ensures closed the contact of the low gas pressure switch
4 Make a trial for burner ignition

The start-up cycle must be as follows:

– Starting the fan for pre-ventilation
– Performing the gas valve seal control, if provided
– Completion of pre-ventilation
– Arrival of the ignition point
– Power supply of the ignition transformer
– Electrical Supply of solenoid gas valves

Since the manual gas ball valve is closed, the burner will not light up and its control box will go to a safety lockout condition.

The actual electrical supply of the solenoid gas valves can be verified by inserting a tester. Some valves are equipped with light signals (or close/open position indicator) that turn on at the same time as their power supply.

WARNING

IF THE ELECTRICAL SUPPLY OF THE GAS VALVES OCCURS AT UNEXPECTED TIMES, DO NOT OPEN MANUAL GAS BALL VALVE, SWITCH OFF POWER LINE; CHECK THE WIRES; CORRECT THE ERRORS AND REPEAT THE COMPLETE TEST.

6.2.3 Checking and cleaning

The operator must use the required equipment during maintenance.

Combustion
The optimum calibration of the burner requires an analysis of the flue gases.
Significant differences with respect to the previous measurements indicate the points where most care should be exercised during maintenance.

Combustion head
Open the burner and make sure that all components of the combustion head are in good condition, not deformed by the high temperatures, free of impurities from the surroundings and correctly positioned.

Burner
Clean the outside of the burner.

Fan
Check to make sure that no dust has accumulated inside the fan or on its blades, as this condition will cause: a reduction in the air flow rate and provoke polluting combustion.

Boiler
Clean the boiler as indicated in its accompanying instructions, especially in order to maintain all the original combustion characteristics intact.

Flame sensor

Minimum current for correct working is 70 µA.

If the value is lower, it could be due to:
– exhausted flame sensor;
– low voltage (lower than 187 V);
– bad regulation of the burner.

In order to measure the current, use a microammeter of 100 µA d.c., connected in series to the sensor, as in the layout, with a capacitor of 100 µF - 1V d.c. at the same level of the instrument (Fig. 30).

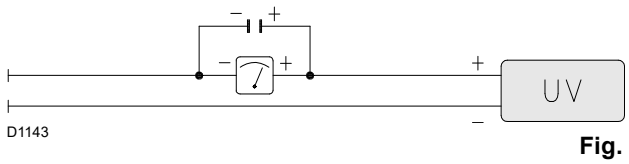

Fig. 30

Gas leaks

Make sure that there are no gas leaks on the pipe between the gas meter and the burner.

Gas filter

Change the gas filter when it is dirty.

Combustion

In case the combustion values found at the beginning of the intervention do not respect the standards in force or, in any case, do not correspond to a proper combustion, contact the Technical Assistance Service in order to carry out the necessary adjustments.

EN 676		Air excess		CO
		Max. output. $\lambda \leq 1.2$	Max. output. $\lambda \leq 1.3$	
GAS	Theoretical max CO_2 0 % O_2	CO_2 % Calibration		mg/kWh
		$\lambda = 1.2$	$\lambda = 1.3$	
G 20	11.7	9.7	9	≤ 100
G 25	11.5	9.5	8.8	≤ 100
G 30	14.0	11.6	10.7	≤ 100
G 31	13.7	11.4	10.5	≤ 100

Tab. O

6.2.4 Dismantling the flame sensor

To dismantle the flame sensor 1)(Fig. 31) after disconnecting it electrically, loosen the screws 2) and turn everything to remove it from its support.

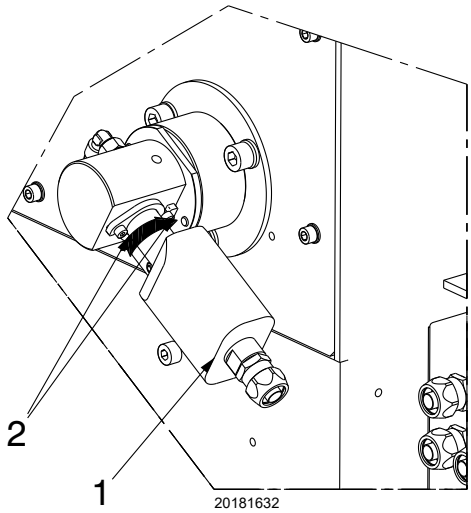

Fig. 31

6.2.5 Safety components

The safety components must be replaced at the end of their life cycle indicated in Tab. P. The specified life cycles do not refer to the warranty terms indicated in the delivery or payment conditions.

Safety component	Life cycle
Flame control	10 years or 250,000 operation cycles
Flame sensor	10 years or 250,000 operation cycles
Gas valves (solenoid)	10 years or 250,000 operation cycles
Pressure switches	10 years or 250,000 operation cycles
Pressure adjuster	15 years
Servomotor (electronic cam) (if present)	10 years or 250,000 operation cycles
Oil valve (solenoid) (if present)	10 years or 250,000 operation cycles
Oil regulator (if present)	10 years or 250,000 operation cycles
Oil pipes/ couplings (metallic) (if present)	10 years
Flexible hoses (if present)	5 years or 30,000 pressurised cycles
Fan impeller	10 years or 500,000 start-ups

Tab. P

6.2.6 Replacing the shutter

To replace the shutter proceed as follows:

- ➤ disconnect the purging pipe from the air box 2)(Fig. 8 on page 12);
- ➤ remove the cover 1) of the air conveyor 4)(Fig. 32);
- ➤ disconnect the internal tie-rod 2) as described in the paragraph “**Combustion head adjustment**” on page 23;
- ➤ open the air conveyor on the hinge after removing the screws 3)(Fig. 32);
- ➤ remove the ignition pilot 5) and the head 6) as described in the paragraph “**Access to head internal part**” on page 17;
- ➤ remove the adjusting screws 7) and 8) of the shutter slide bars 9) and the slide bars themselves;
- ➤ remove the shutter 10);
- ➤ dismantle the pins with a bearing 12) mounted on the shutter by loosening the nuts 11). If they are in a good condition put them back on the shutter, otherwise replace them (see the spare parts list for the part code).
- ➤ Put back everything in the reverse order to the one just described;
- ➤ centre the shutter with respect to the flame funnel using the pins and the adjustment screws 7);
- ➤ make sure the shutter is sliding correctly after greasing the bearings and the spherical bearings of the haul-off tie-rod of the shutter itself;
- ➤ put back the head and the pilot;
- ➤ close the air box and connect the high tension cable of the pilot;
- ➤ connect the sliding tie-rod of the shutter to the internal lever;
- ➤ close the cover 1) of the air conveyor 4).

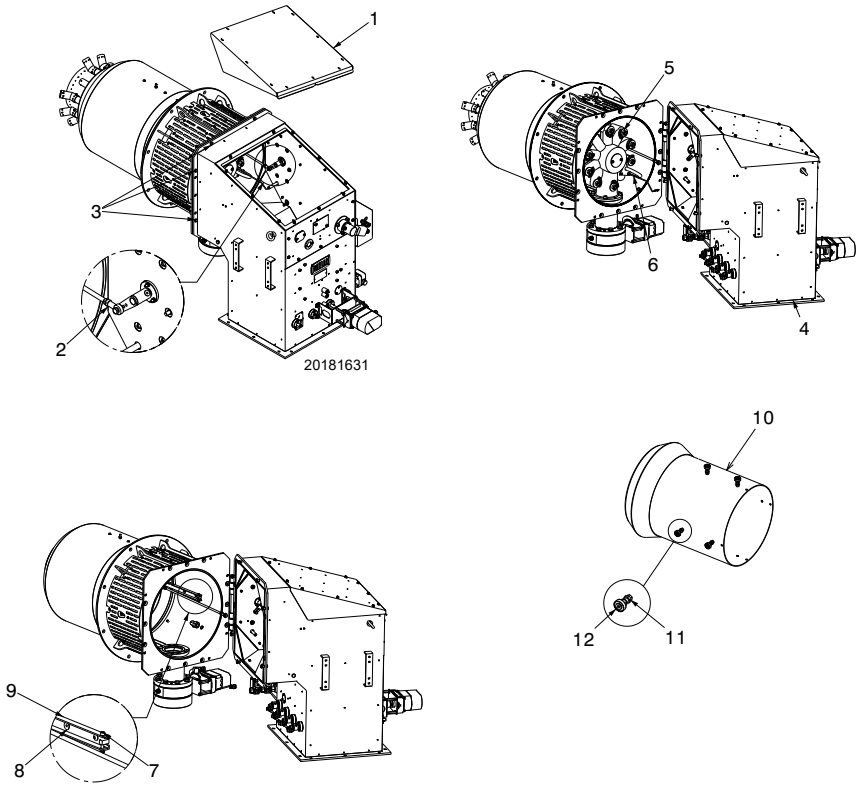

Fig. 32

6.3 Opening the burner

DANGER

Turn off the burner's power supply using the main system switch.

DANGER

Turn off the fuel interception tap.

Wait for the components in contact with heat sources to cool down completely.

To access the inside of the combustion head, see the paragraph “**Access to head internal part**” on page 17.

6.4 Closing the burner

Refit following the steps described but in reverse order; refit all burner components as they were originally assembled.

After carrying out maintenance, cleaning or checking operations, reassemble the cover and all the safety and protection devices of the burner.

7 Faults - Possible causes - Solutions

If faults arise in ignition or operations, the burner performs a “safety stop”, which is signalled by the red burner lockout LED.

The display visualises alternately the lockout code and the relative diagnostic. To reset the start-up conditions, refer to the “Reset procedure” indicated in the control box manual supplied.

When the burner starts again, the red LED goes out and the control box is reset.

In the event the burner stops, in order to prevent any damage to the installation, do not unblock the burner more than twice in a row. If the burner locks out for a third time, contact the customer service.

In the event there are further lockouts or faults with the burner, the maintenance interventions must only be carried out by qualified, authorised personnel, in accordance with the contents of this manual and in compliance with the standards and regulations of current laws.

Problem	Possible cause	Recommended remedy
The burner does not start	No electrical power supply	Close all switches - Check connections
	A limiter or safety control device is open	Adjust or replace
	Flame control lockout	Release
	Control box fuse broken	Replace it
	Incorrect electrical wiring	Check connections
	Defective flame control	Replace it
	No gas supply	Open the manual valves between meter and train
	Mains gas pressure insufficient	Contact your gas company
	Minimum gas pressure switch fails to close	Adjust or replace
	Air pressure switch in operating position	Adjust or replace
The burner does not switch on and the lockout appears	Flame simulation	Replace the control box
The burner starts and then goes into lockout	Air pressure switch does not switch owing to lack of air pressure:	
	Air pressure switch is badly adjusted	Adjust it or replace it
	Pressure switch pressure test point pipe blocked	Clean
	Head wrongly adjusted	Adjust
The burner turns on and then remains in lockout mode	Defective flame detection circuit	Replace control box
Once the pre-purging and the safety time has elapsed, the burner goes into lockout without the flame appearing	The VR solenoid lets too little gas through	Increase it
	The VR or VS solenoid valve does not open	Replace the coil or the rectifier panel
	Gas pressure too low	Increase pressure at regulator
	The burner’s pilot is not functioning	Check
	Firing transformer defective	Replace it
	Incorrect valve or firing transformer connections	Redo them
	Defective control box	Replace
	A closed valve up-line from the gas train	Open it
	Air in pipework	Bleed air
Locks out with flame	The VR solenoid lets too little gas through	Increase it
	Maximum gas pressure switch intervention	Adjust or replace
	Defective control box	Replace
The burner continues to repeat the start-up cycle, without lockout	The gas pressure in the network is near the value on which the min. gas pressure switch is adjusted. The sudden fall in pressure that follows the opening of the valve causes the temporary opening of the pressure switch itself immediately the valve closes and the burner stops. The pressure starts to increase again. The pressure switch closes and repeats the start up cycle. The sequence repeats endlessly.	Reduce the intervention pressure of the min. gas pressure switch. Replace the gas filter cartridge

Problem	Possible cause	Recommended remedy
Burner goes into lockout during operation	Fault on air pressure switch	Replace
	Maximum gas pressure switch intervention	Adjust or replace
Lockout when the burner stops	Permanence of the flame in the combustion head or flame simulation	Eliminate flame permanence or replace control box
Firing with pulses	Head badly adjusted	Adjust it properly
	Fan damper poorly adjusted, too much air	Adjust it
	Firing output too high	Reduce it

Tab. Q

A Appendix - Electrical panel layout

1	**Index of layouts**
2	Indication of references
3	Operational layout
4	Operational layout

2 Indication of references

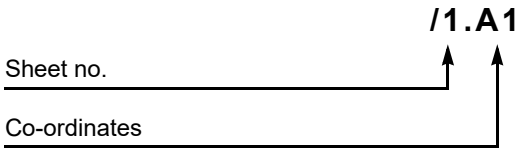

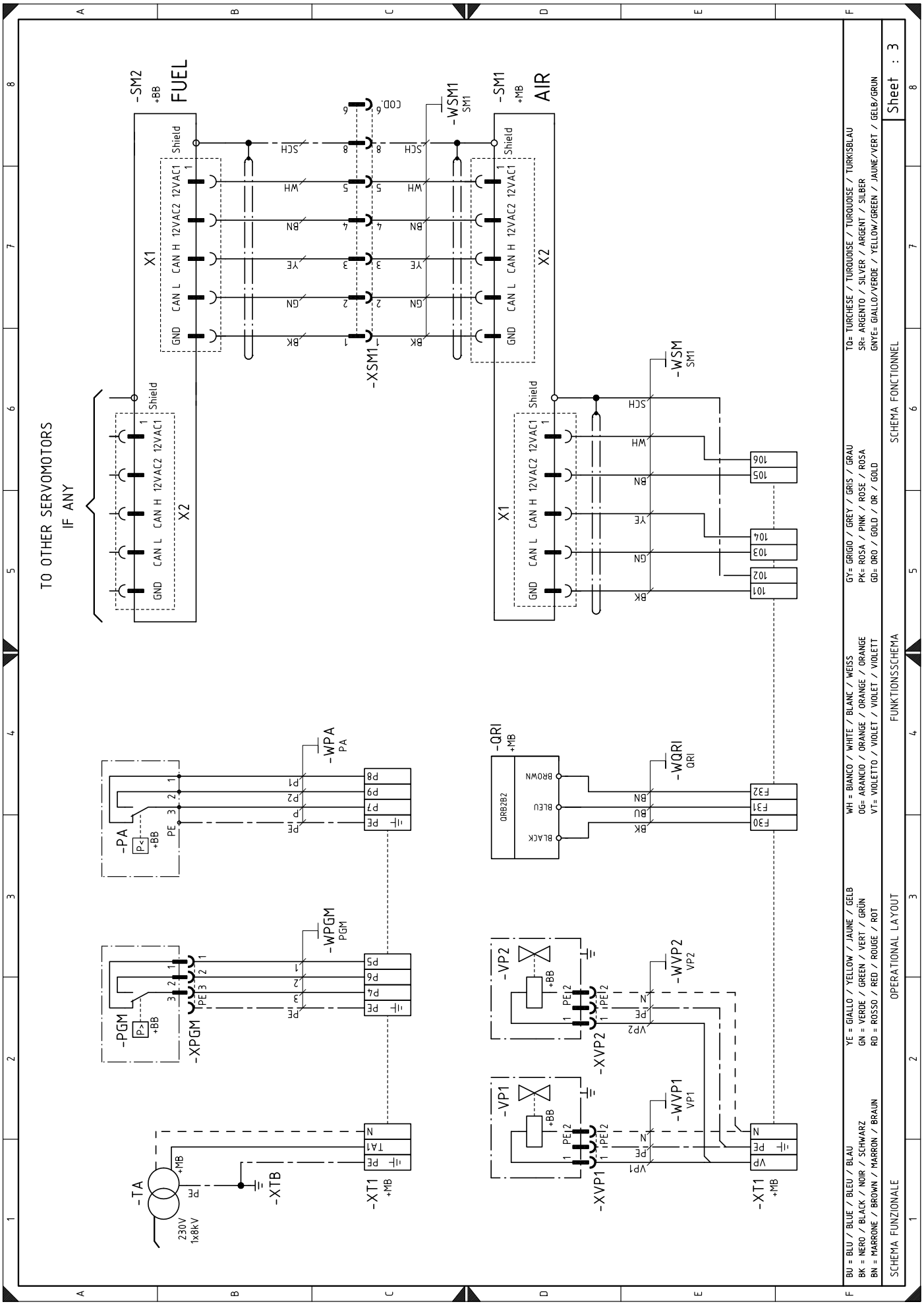
-SM2
+BB
FUEL
-SM1
+MB
AIR
-WSM1
SM1
-XSM1
X1
X2
GND
CAN L
CAN H
12VAC2
12VAC1
Shield
SCH
WH
BN
YE
GN
BK
TO OTHER SERVOMOTORS
IF ANY
-WSM
SM1
-PA
-WPA
PA
-PGM
-WPGM
PGM
-XPGM
-TA
-XTB
-XT1
+MB
230V
1x8kV
-QRI
-WQRI
QRI
BROWN
BLEU
BLACK
-VP2
-WVP2
VP2
-XVP2
-VP1
-WVP1
VP1
-XVP1
BU = BLU / BLUE / BLEU / BLAU
BK = NERO / BLACK / NOIR / SCHWARZ
BN = MARRONE / BROWN / MARRON / BRAUN
YE = GIALLO / YELLOW / JAUNE / GELB
GN = VERDE / GREEN / VERT / GRÜN
RD = ROSSO / RED / ROUGE / ROT
WH = BIANCO / WHITE / BLANC / WEISS
OG= ARANCIO / ORANGE / ORANGE / ORANGE
VT= VIOLETTO / VIOLET / VIOLET / VIOLETT
GY= GRIGIO / GREY / GRIS / GRAU
PK= ROSA / PINK / ROSE / ROSA
GD= ORO / GOLD / OR / GOLD
TQ= TURCHESE / TURQUOISE / TURQUOISE / TURKISBLAU
SR= ARGENTO / SILVER / ARGENT / SILBER
GNYE= GIALLO/VERDE / YELLOW/GREEN / JAUNE/VERT / GELB/GRUN
SCHEMA FUNZIONALE
OPERATIONAL LAYOUT
FUNKTIONSSCHEMA
SCHEMA FONCTIONNEL
Sheet : 3

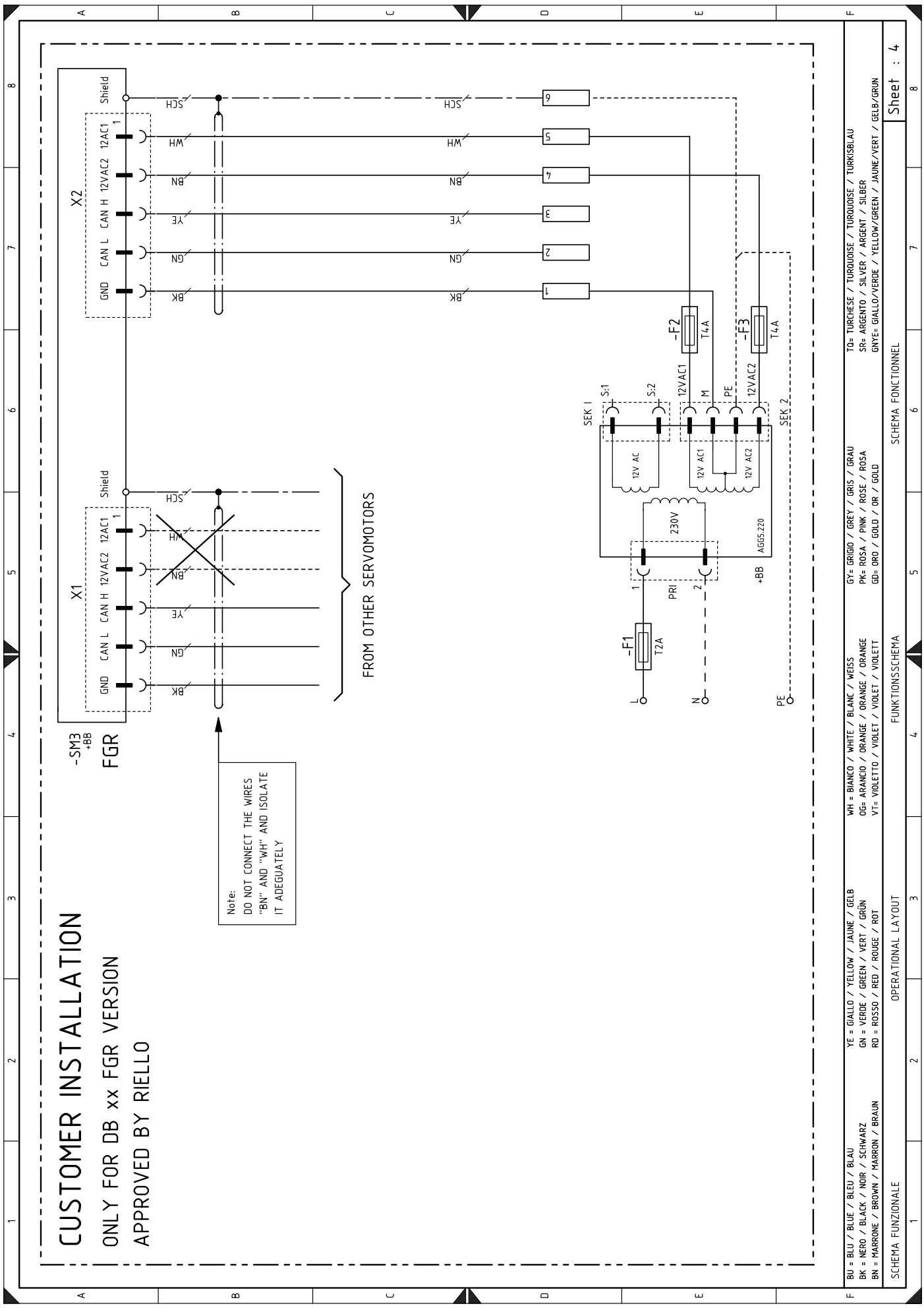
CUSTOMER INSTALLATION
ONLY FOR DB xx FGR VERSION
APPROVED BY RIELLO
-SM3
+BB
FGR
X2
X1
GND
CAN L
CAN H
12VAC2
12AC1
Shield
SCH
WH
BN
YE
GN
BK
FROM OTHER SERVOMOTORS
Note:
DO NOT CONNECT THE WIRES
"BN" AND "WH" AND ISOLATE
IT ADEGUATELY
-F1
T2A
-F2
T4A
-F3
T4A
SEK 1
SEK 2
S:1
S:2
12VAC1
M
PE
12VAC2
12V AC
12V AC1
12V AC2
230V
PRI
AGG5.220
+BB
L
N
PE
BU = BLU / BLUE / BLEU / BLAU
BK = NERO / BLACK / NOIR / SCHWARZ
BN = MARRONE / BROWN / MARRON / BRAUN
YE = GIALLO / YELLOW / JAUNE / GELB
GN = VERDE / GREEN / VERT / GRÜN
RD = ROSSO / RED / ROUGE / ROT
WH = BIANCO / WHITE / BLANC / WEISS
OG= ARANCIO / ORANGE / ORANGE / ORANGE
VI= VIOLETTO / VIOLET / VIOLET / VIOLETT
GY= GRIGIO / GREY / GRIS / GRAU
PK= ROSA / PINK / ROSE / ROSA
GD= ORO / GOLD / OR / GOLD
TQ= TURCHESE / TURQUOISE / TURQUOISE / TURKISBLAU
SR= ARGENTO / SILVER / ARGENT / SILBER
GNYE= GIALLO/VERDE / YELLOW/GREEN / JAUNE/VERT / GELB/GRUN
SCHEMA FUNZIONALE
OPERATIONAL LAYOUT
FUNKTIONSSCHEMA
SCHEMA FONCTIONNEL
Sheet : 4

Wiring layout key

PA Air pressure switch
PGM Max. gas pressure switch
SM1 Servomotors
TA Ignition transformer
QRI Flame sensor
VP1 Pilot solenoid
VP2 Pilot solenoid
XPGM Connector for Max. pressure switch
XT1 Burner terminal strip
XVP1 Pilot solenoid 1 connector
XVP2 Pilot solenoid 2 connector
XSM1 Air servomotor connector

RIELLO S.p.A.
I-37045 Legnago (VR)
Tel.: +39.0442.630111
http:// www.riello.it
http:// www.riello.com

Con riserva di modifiche - Subject to modifications