GB

Dual fuel light oil/gas burner

Two stage progressive or modulating operation

CE

CODICE - CODE	MODELLO - MODEL
20163106	DB 16 LSE FGR

20163598 (1) - 04/2019

Original instructions

1 Information and general warnings ... 3
1.1 Information about the instruction manual ... 3
1.1.1 Introduction ... 3
1.1.2 General dangers ... 3
1.1.3 Other symbols ... 3
1.1.4 Delivery of the system and the instruction manual ... 4
1.2 Guarantee and responsibility ... 4

2 Safety and prevention ... 5
2.1 Introduction ... 5
2.2 Personnel training ... 5

3 Technical description of the burner ... 6
3.1 Burner designation ... 6
3.2 Models available ... 7
3.3 Burner categories - Countries of destination ... 7
3.4 Technical data ... 7
3.5 Electrical data ... 7
3.6 Maximum dimensions ... 8
3.7 Flange dimensions ... 8
3.8 Firing rate ... 9
3.9 Test boiler ... 9
3.10 Air side pressure drop (detected upline of the damper with complete opening) ... 10
3.11 Gas side pressure drops ... 11
3.12 Description of burner components ... 12
3.13 Burner equipment ... 12
3.14 Servomotor (SQM48.4....) ... 13
3.15 AZL Display... ... 14
3.16 Control box for the air/fuel ratio (LMV51...) ... 15

4 Installation ... 17
4.1 Notes on safety for the installation ... 17
4.2 Handling ... 17
4.3 Preliminary checks ... 17
4.4 Operating position ... 18
4.5 Removing the shutter lockout pins ... 18
4.6 Preparing the boiler ... 18
4.6.1 Boring the boiler plate ... 18
4.6.2 Blast tube length ... 18
4.7 Lifting points ... 19
4.8 Boiler fixing ... 19
4.9 Access to head internal part ... 20
4.10 Nozzles ... 21
4.10.1 Recommended nozzles ... 21
4.11 Mechanical atomization lance ... 21
4.12 Ignition pilot ... 21
4.13 Light oil supply ... 22
4.13.1 General supply layout (example) ... 22
4.13.2 Adjustment and calibration of the oil circuit and of the air output ... 23
4.13.3 Priming pump (example) ... 24
4.14 Gas feeding ... 25
4.14.1 Gas feed connection to the burner ... 25
4.14.2 General gas feeding layout (example) ... 25
4.14.3 Gas train ... 26
4.14.4 Gas train installation ... 26
4.14.5 Pilot - gas train connection ... 26

4.15 FGR duct system 27
4.16 Electrical wiring 28
4.16.1 Supply cables and external connections passage 28

5 Start-up, calibration and operation of the burner 29
5.1 Notes on safety for the first start-up 29
5.2 Combustion head adjustment 29
5.3 Adjustments prior to ignition (light oil) 29
5.3.1 Nozzle 29
5.4 Burner ignition (light oil) 29
5.5 Adjustments prior to ignition (gas) 30
5.6 Burner start-up (gas) 30
5.7 Ignition pilot burner 30
5.8 Burner ignition 31
5.9 Combustion air adjustment 31
5.9.1 Air / gas adjustment and output modulation 31
5.9.2 Pressure switch adjustment 31
5.10 Pressure switch adjustment 32
5.10.1 Air pressure switch 32
5.10.2 Maximum gas pressure switch 32
5.10.3 Minimum gas pressure switch 32
5.10.4 Oil pressure switch 32
5.11 Final checks (with burner operating) 33

6 Maintenance 34
6.1 Notes on safety for the maintenance 34
6.2 Maintenance programme 34
6.2.1 Maintenance frequency 34
6.2.2 Safety test - with gas ball valve closed 34
6.2.3 Checking and cleaning 34
6.2.4 Flame sensor disassembling 35
6.2.5 Safety components 36
6.2.6 Shutter replacement 37
6.3 Opening the burner 38
6.4 Closing the burner 38

7 Faults - Possible causes - Solutions 39
7.1 Oil operation 39
7.2 Gas operation 40

A Appendix - Electrical panel layout 41

1 Information and general warnings

1.1 Information about the instruction manual

1.1.1 Introduction

The instruction manual supplied with the burner:

- ➤ is an integral and essential part of the product and must not be separated from it; it must therefore be kept carefully for any necessary consultation and must accompany the burner even if it is transferred to another owner or user, or to another system. If the manual is lost or damaged, another copy must be requested from the Technical Assistance Service of the area;
- ➤ is designed for use by qualified personnel;
- ➤ offers important indications and instructions relating to the installation safety, start-up, use and maintenance of the burner.

Symbols used in the manual

In some parts of the manual you will see triangular DANGER signs. Pay great attention to these, as they indicate a situation of potential danger.

1.1.2 General dangers

The **dangers** can be of **3 levels**, as indicated below.

Maximum danger level!
This symbol indicates operations which, if not carried out correctly, cause serious injury, death or long-term health risks.

This symbol indicates operations which, if not carried out correctly, may cause serious injury, death or long-term health risks.

This symbol indicates operations which, if not carried out correctly, may cause damage to the machine and/or injury to people.

1.1.3 Other symbols

DANGER: LIVE COMPONENTS

This symbol indicates operations which, if not carried out correctly, lead to electric shocks with lethal consequences.

DANGER: FLAMMABLE MATERIAL

This symbol indicates the presence of flammable materials.

DANGER: BURNING

This symbol indicates the risks of burns due to high temperatures.

DANGER: CRUSHING OF LIMBS

This symbol indicates the presence of moving parts: danger of crushing of limbs.

WARNING: MOVING PARTS

This symbol indicates that you must keep limbs away from moving mechanical parts; danger of crushing.

DANGER: EXPLOSION

This symbol signals places where an explosive atmosphere may be present. An explosive atmosphere is defined as a mixture - under atmospheric conditions - of air and flammable substances in the form of gases, vapours, mist or dust in which, after ignition has occurred, combustion spreads to the entire unburned mixture.

PERSONAL PROTECTION EQUIPMENT

These symbols indicate the equipment that must be worn and kept by the operator for protection against threats against safety and/or health while at work.

OBLIGATION TO ASSEMBLE THE COVER AND ALL THE SAFETY AND PROTECTION DEVICES

This symbol signals the obligation to reassemble the cover and all the safety and protection devices of the burner after any maintenance, cleaning or checking operations.

ENVIRONMENTAL PROTECTION

This symbol gives indications for the use of the machine with respect for the environment.

IMPORTANT INFORMATION

This symbol indicates important information that you must bear in mind.

➤ This symbol indicates a list.

Abbreviations used

Ch.	Chapter
Fig.	Figure
Page	Page
Sec.	Section
Tab.	Table

1.1.4 Delivery of the system and the instruction manual

When the system is delivered, it is important that:

➤ the instruction manual is delivered to the user by the system manufacturer, with the recommendation to keep it in the room where the heat generator is to be installed.

➤ The instruction manual shows:
– the serial number of the burner;

.....

– the address and telephone number of the nearest Assistance Centre.

.....
.....
.....

➤ The system supplier must carefully inform the user about:
– the use of the system;
– any further tests that may be required before activating the system;
– maintenance, and the need to have the system checked at least once a year by a representative of the manufacturer or another specialised technician.
To ensure a periodic check, the manufacturer recommends the drawing up of a Maintenance Contract.

1.2 Guarantee and responsibility

The manufacturer guarantees its new products from the date of installation, in accordance with the regulations in force and/or the sales contract. At the moment of the first start-up, check that the burner is integral and complete.

WARNING

Failure to observe the information given in this manual, operating negligence, incorrect installation and carrying out of non authorised modifications will result in the annulment by the manufacturer of the guarantee that it supplies with the burner.

In particular, the rights to the guarantee and the responsibility will no longer be valid, in the event of damage to things or injury to people, if such damage/injury was due to any of the following causes:

➤ incorrect installation, start-up, use and maintenance of the burner;
➤ improper, incorrect or unreasonable use of the burner;
➤ intervention of unqualified personnel;
➤ carrying out of unauthorised modifications on the equipment;
➤ use of the burner with safety devices that are faulty, incorrectly applied and/or not working;
➤ installation of untested supplementary components on the burner;
➤ powering of the burner with unsuitable fuels;
➤ faults in the fuel supply system;
➤ continuation of use of the burner when a fault has occurred;
➤ repairs and/or overhauls incorrectly carried out;
➤ modification of the combustion chamber with inserts that prevent the regular development of the structurally established flame;
➤ insufficient and inappropriate surveillance and care of those burner components most likely to be subject to wear and tear;
➤ use of non-original components, including spare parts, kits, accessories and optional;
➤ force majeure.

The manufacturer furthermore declines any and every responsibility for the failure to observe the contents of this manual.

2 Safety and prevention

2.1 Introduction

The burners have been designed and built in compliance with current regulations and directives, applying the known technical rules of safety and envisaging all the potential danger situations.

It is necessary, however, to bear in mind that the imprudent and clumsy use of the equipment may lead to situations of death risk for the user or third parties, as well as the damaging of the burner or other items. Inattention, thoughtlessness and excessive confidence often cause accidents; the same applies to tiredness and sleepiness.

It is a good idea to remember the following:

➤ The burner must only be used as expressly described. Any other use should be considered improper and therefore dangerous.

In particular:

it can be applied to boilers operating with water, steam, diathermic oil, and to other uses expressly foreseen by the manufacturer;

the type and pressure of the fuel, the voltage and frequency of the electrical power supply, the minimum and maximum deliveries for which the burner has been regulated, the pressurisation of the combustion chamber, the dimensions of the combustion chamber and the room temperature must all be within the values indicated in the instruction manual.

➤ Modification of the burner to alter its performance and destinations is not allowed.

➤ The burner must be used in exemplary technical safety conditions. Any disturbances that could compromise safety must be quickly eliminated.

➤ Opening or tampering with the burner components is not allowed, apart from the parts requiring maintenance.

➤ Only those parts envisaged by the manufacturer can be replaced.

WARNING

The manufacturer guarantees safety and proper functioning only if all burner components are intact and positioned correctly.

2.2 Personnel training

The user is the person, body or company that has acquired the machine and intends to use it for the specific purpose. He is responsible for the machine and for the training of the people working around it.

The user:

➤ undertakes to entrust the machine exclusively to suitably trained and qualified personnel;

➤ undertakes to inform his personnel in a suitable way about the application and observance of the safety instructions. With that aim, the user undertakes to ensure that everyone knows the use and safety instructions for his own duties.

➤ Personnel must follow all the danger and caution indications shown on the machine.

➤ Personnel must not carry out, on their own initiative, operations or interventions that are not within their province.

➤ Personnel are obliged to inform their superiors of every problem or dangerous situation that may arise.

➤ The assembly of parts of other makes, or any modifications, can alter the characteristics of the machine and hence compromise operating safety. The manufacturing company therefore accepts no responsibility whatsoever for any which may result from the use of non-original parts.

In addition:

➤ must take all the measures necessary to prevent unauthorised people gaining access to the machine;

➤ the user must inform the manufacturer if faults or malfunctioning of the accident prevention systems are noticed, along with any presumed danger situation;

➤ personnel must always use the personal protective equipment envisaged by legislation and follow the indications given in this manual.

3 Technical description of the burner

3.1 Burner designation

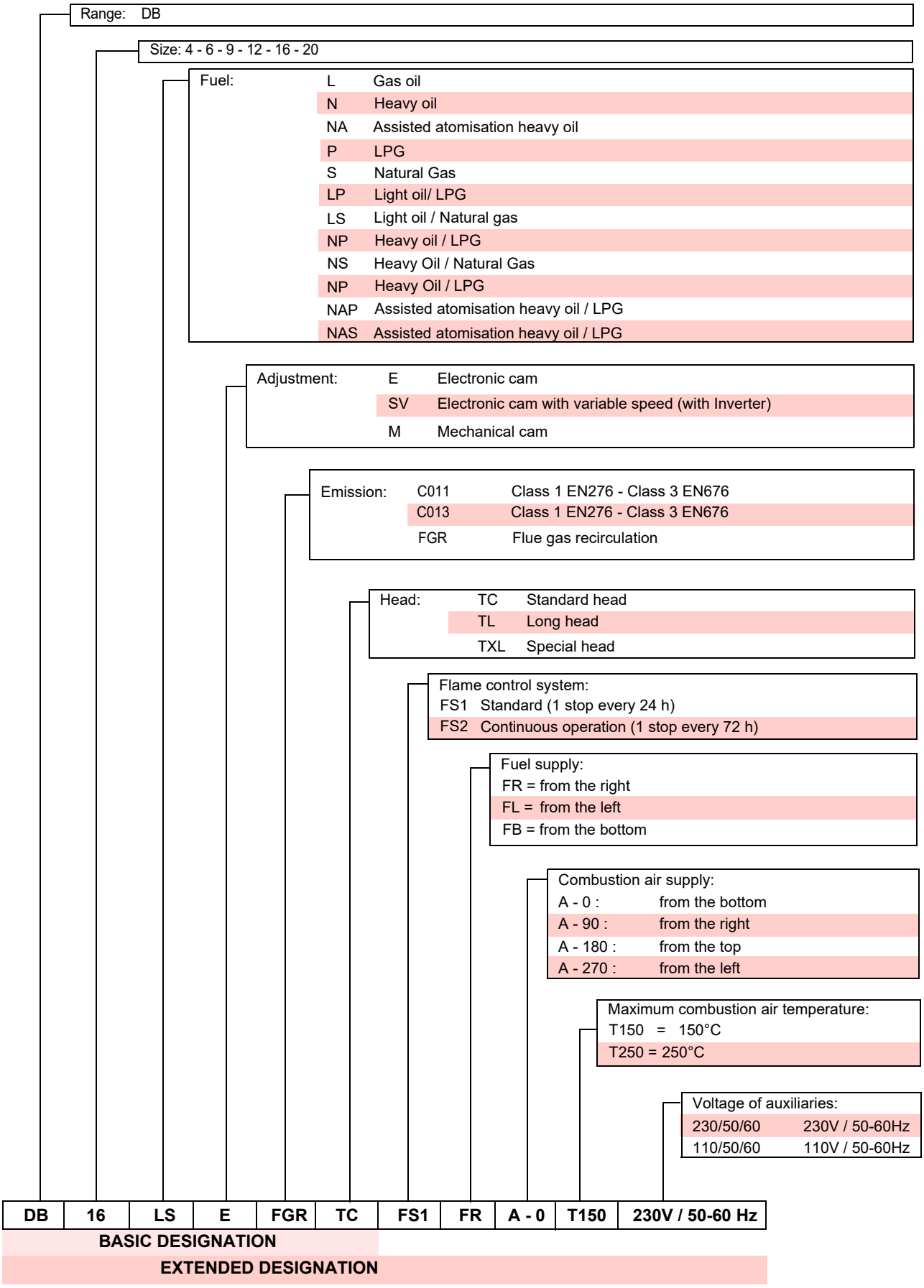

3.2 Models available

Designation	Voltage	Code
DB 16 LSE FGR FS1 A0 T150 TC	230V / 50-60Hz	20163106

Tab. A

3.3 Burner categories - Countries of destination

Country of destination	Gas category
SE - FI - AT - GR - DK - ES - GB - IT - IE - PT - IS - CH - NO	I_{2H}
DE	I_{2ELL}
NL	I_{2L} - I_{2E} - I_2 (43,46 ÷ 45,3 MJ/m^3 (0°C))
FR	I_{2Er}
BE	$I_{2E(R)B}$
LU - PL	I_{2E}

Tab. B

3.4 Technical data

Model			**DB 16 LSE**
Output (1)	min - max	kW kg/h	2600/8000 ÷ 16000 220/678 ÷ 1356
Fuels			– Natural gas: G20 - NCV 10 kWh/Nm^3 – Natural gas: G25 - NCV 8.6 kWh/Nm^3 – Light oil, max. viscosity at 20 °C: 6 mm^2/s (1.5°E - 6 cSt)
Gas pressure at max. output (2) Gas: G20/G25		mbar	5/24
Operation			– FS2 continuous (min. 1 stop in 72 hours) – Modulanting
Modulating ratio at maximum output		Gas Olio	1 : 5 1 : 4
Nozzles		N°	1
Combustion air temperature		°C max	150
Ignition			Pilot burner with gas
Weight		kg	460

Tab. C

(1) Reference conditions: Ambient temperature 20°C - Gas temperature 15°C - Barometric pressure 1013 mbar - Altitude 0 m a.s.l.
(2) Pressure at the test point (Fig. 8 on page 12) with zero pressure in the combustion chamber and at the maximum output of the burner.

3.5 Electrical data

Model			**DB 16 LSE**
Electrical supply			230 V / 50-60 Hz
Ignition transformer		V1 - V2 I1 - I2	230 V - 1 x 8 kV 1.4 A - 30 mA
Electric power consumption	Gas Oil	kW max	0.5 0.6
Protection level			IP 54

Tab. D

3.6 Maximum dimensions

The maximum dimensions of the burner are given in Fig. 1.

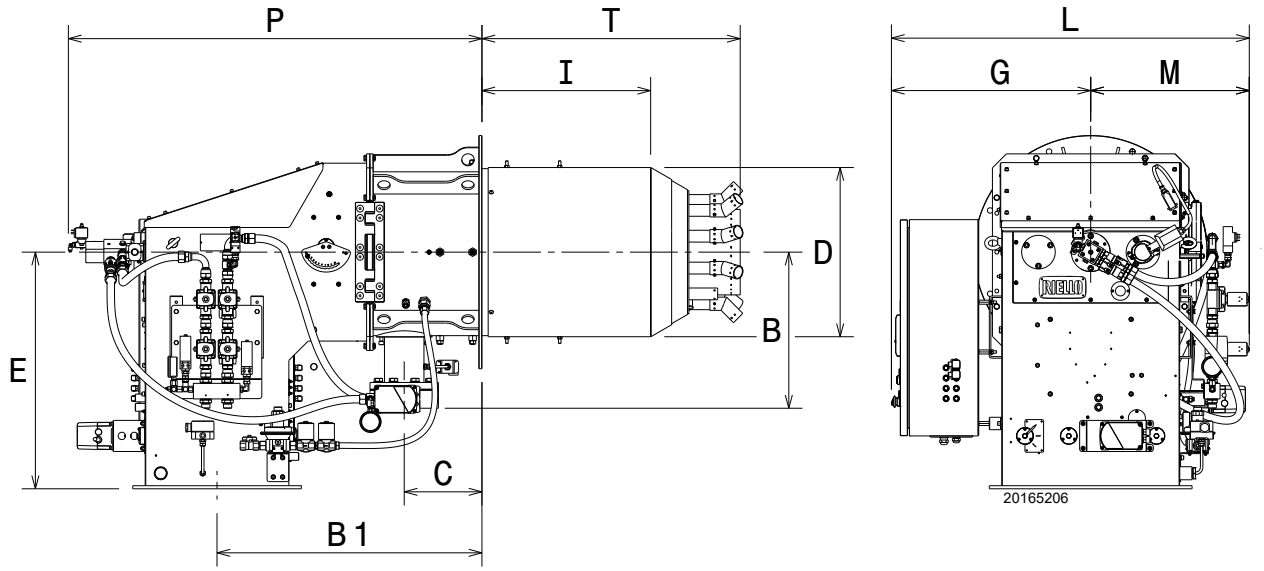

Fig. 1

B	B1	C	D	E	G	I	L	M	P	T
502	852	250	544	761	641	542	1151	510	1330	839

Tab. E

3.7 Flange dimensions

Air duct connection

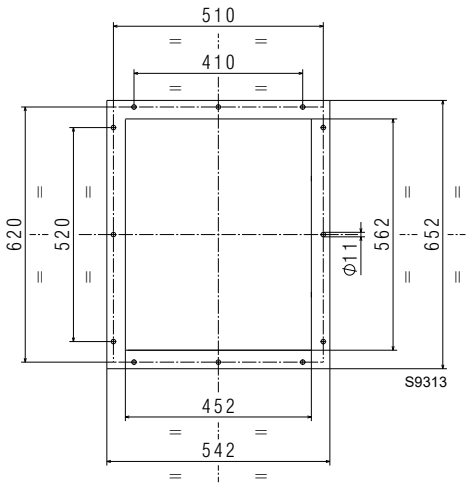

Boiler fixing

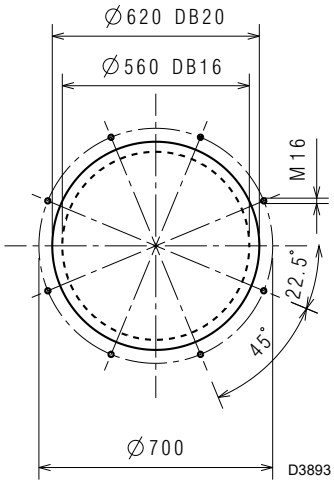

Gas feeding

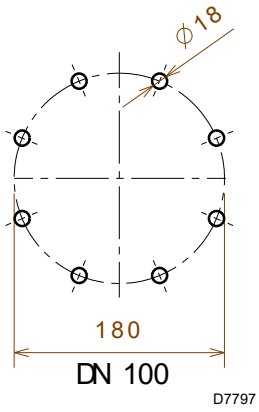

Fig. 2

3.8 Firing rate

The **MAXIMUM OUTPUT** is chosen from within the continuous diagram area (Fig. 3).

The **MINIMUM OUTPUT** should never be less than 3000 kW as shown in the diagram (Fig. 3).

WARNING

The firing rate value (Fig. 3) has been obtained considering an ambient temperature of 20 °C, an atmospheric pressure of 1013 mbar (approx. 0 m a.s.l.), and with the combustion head adjusted as shown on page 29.

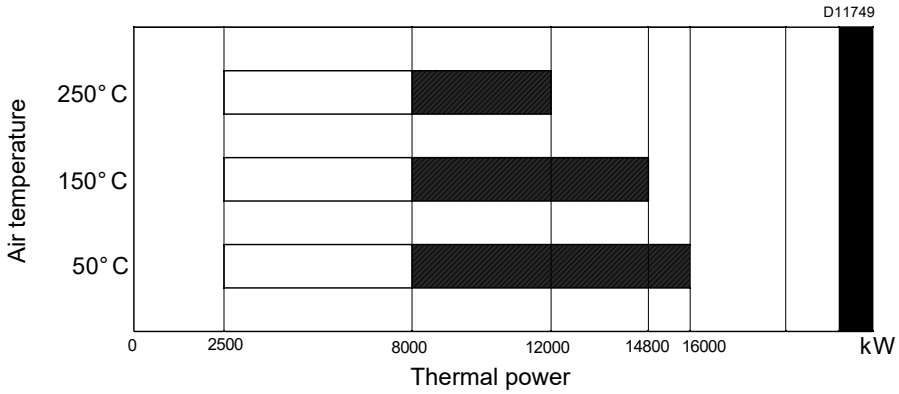

Fig. 3

3.9 Test boiler

The burner/boiler combination does not pose any problems if the boiler is EC approved and its combustion chamber dimensions are similar to those indicated in the diagram (Fig. 4).

If the burner must be combined with a boiler that has not been EC approved and/or its combustion chamber dimensions are clearly smaller than those indicated in the diagram, consult the manufacturer.

The firing rates were set in relation to special test boilers, according to EN 676 regulations.

In Fig. 4 you can see the diameter and length of the test combustion chamber.

Example:
Output 7000 kW - diameter 120 cm - length 6 m

MODULATING RATIO

The modulating ratio, obtained in test boilers, according to the norm (EN 676 for gas, EN 267 for light oil), is 1:5 for light oil and 1:4 for gas.

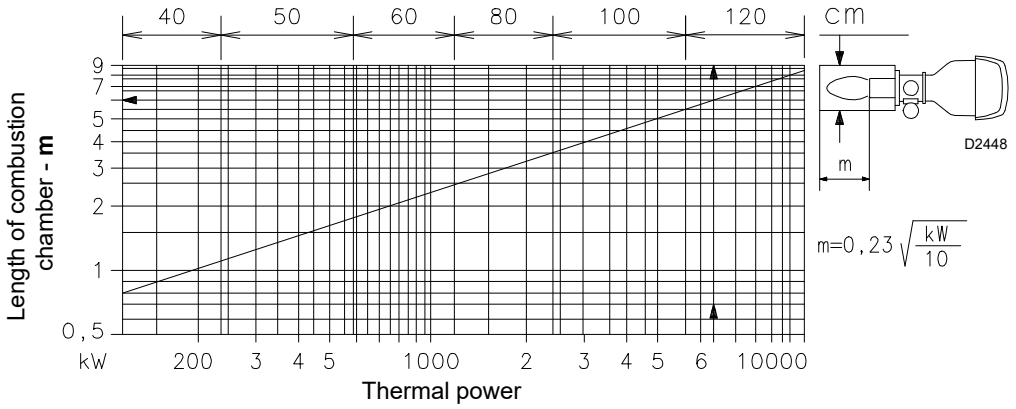

Fig. 4

3.10 Air side pressure drop (detected upline of the damper with complete opening)

The pressure curves refer to the combustion head adjustment conditions according. In the event that the supplied air has a temperature greater than 20°C and/or an altitude greater than 100 m. a.s.l., the pressure drops of the head shown in the diagram are multiplied by the coefficient $\mathbf{K_c}$ indicated in Tab. F.

Example:

Burnt output = 9000 kW - Altitude = 750 m. a.s.l. - Combustion air temperature = 120 °C

From the diagram, for an output of 9000 kW, the total pressure drop obtained at the head is equal to: $\Delta\mathbf{p_{20}}$ **= 20 mbar** (combustion air at 20 °C and 100 m. a.s.l. altitude).

In Tab. F there is a multiplier coefficient, for combustion air at 120 °C and an altitude of 750 m. s.l.m., equal to **Kc = 1.449**.

The total pressure drop of the burner head is:

$\Delta\mathbf{p} = \Delta\mathbf{p_{20}} \times \mathbf{K_c} = 20 \times 1.449 = 29$ mbar.

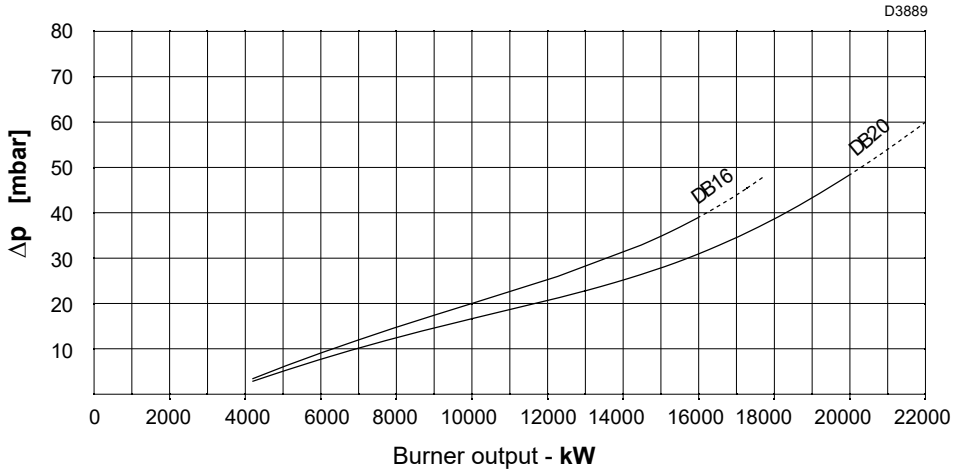

Fig. 5

Altitude	K_c Air temperature °C												
m. a.s.l.	0	20	30	40	50	60	70	80	90	100	120	140	150
0	0.920	0.988	1.021	1.055	1.089	1.122	1.156	1.190	1.223	1.257	1.325	1.392	1.426
100	0.932	1.000	1.034	1.069	1.103	1.137	1.171	1.205	1.239	1.273	1.342	1.410	1.444
500	0.976	1.047	1.083	1.119	1.155	1.190	1.226	1.262	1.298	1.333	1.405	1.477	1.512
750	1.007	1.080	1.117	1.154	1.191	1.228	1.265	1.302	1.338	1.375	1.449	1.523	1.560
1000	1.038	1.114	1.152	1.190	1.228	1.266	1.304	1.342	1.380	1.418	1.494	1.570	1.608
1250	1.069	1.147	1.186	1.226	1.265	1.304	1.343	1.382	1.421	1.460	1.539	1.617	1.656
1500	1.102	1.182	1.223	1.263	1.304	1.344	1.384	1.425	1.465	1.505	1.586	1.667	1.707
1750	1.130	1.213	1.254	1.295	1.337	1.378	1.419	1.461	1.502	1.544	1.626	1.709	1.751
2000	1.174	1.260	1.303	1.346	1.389	1.432	1.475	1.518	1.561	1.604	1.690	1.776	1.819
2250	1.206	1.294	1.338	1.382	1.427	1.471	1.515	1.559	1.603	1.647	1.736	1.824	1.868
2500	1.251	1.343	1.389	1.434	1.480	1.526	1.572	1.618	1.664	1.709	1.801	1.893	1.939
2750	1.284	1.378	1.425	1.472	1.519	1.566	1.613	1.660	1.707	1.754	1.848	1.942	1.989
3000	1.320	1.417	1.465	1.514	1.562	1.610	1.659	1.707	1.755	1.804	1.901	1.997	2.046

Tab. F

3.11 Gas side pressure drops

Gas pressure on the basis of the maximum output developed by the burner is given by the curves in Fig. 6.

It represents the pressure drop in the combustion head.

Natural gas G 20 - N.C.V. = 10 kWh/Nm^3

The curves were taken in the following conditions:

- pressure measured at the test point on the pressure switch downstream from the gas butterfly valve;
- combustion chamber at 0 mbar;
- burner working at full output.

WARNING

Add the pressure of the combustion chamber in mbar to the value of the combustion head drop.

The pressure drop of the completely open butterfly valve is given in Fig. 7.

Combustion head pressure drop

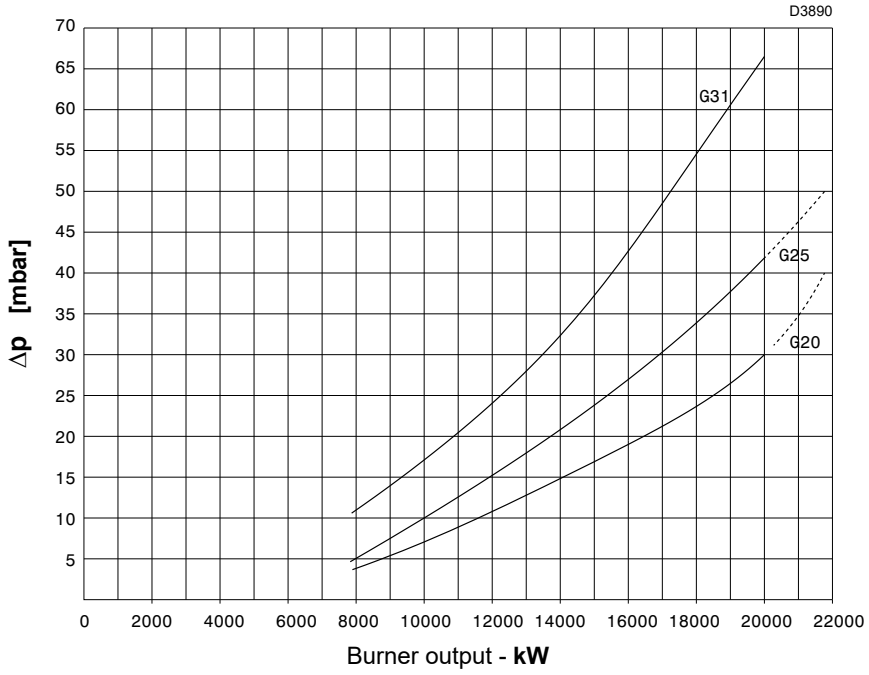

Fig. 6

Butterfly valve pressure drop

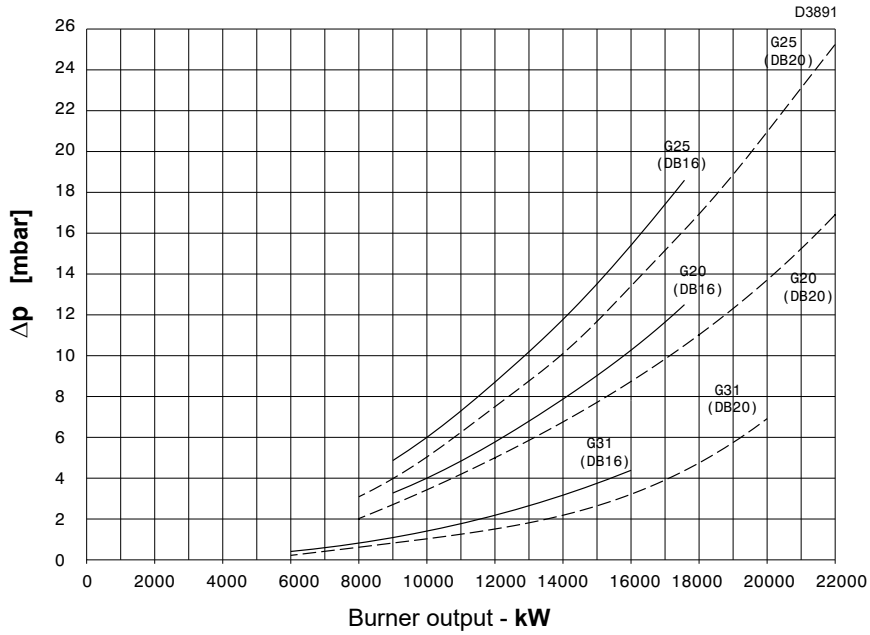

Fig. 7

3.12 Description of burner components

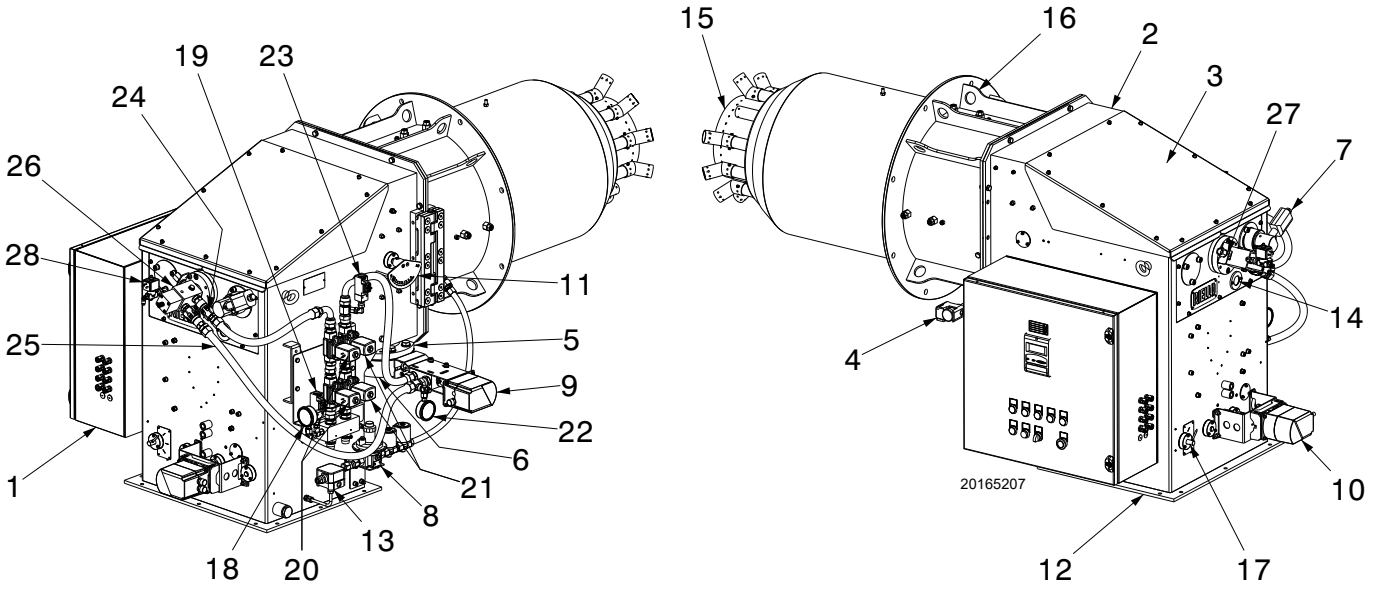

Fig. 8

kEY (Fig. 8)

1 Electrical panel
2 Air box
3 Cover
4 Maximum gas pressure switch
5 Gas output regulator
6 Gas train connection flange
7 Flame sensor
8 Pilot burner gas train
9 Gas/oil servomotor
10 Air servomotor
11 Lever for moving the shutter
12 Air duct connection flange
13 Air pressure switch
14 Flame inspection window
15 Combustion head
16 Boiler connection flange
17 Air damper position indicator
18 Oil delivery pressure gauge
19 Min. pressure switch in oil delivery
20 Oil safety valve in delivery
21 Oil safety valve on return
22 Oil return pressure gauge
23 Oil return pressure switch
24 Oil delivery in lance
25 Oil return from the lance
26 Oil lance
27 Proximity sensor (ON/OFF oil operation)
28 Pneumatic valve implementing oil lance

CAUTION

The burner can be opened to the right or to the left without links to the fuel supply side.

When the burner is closed, the hinge can be refitted on the opposite side.

3.13 Burner equipment

Thermal insulation screen . . . . . No. 1
Gasket for gas train flange . . . . . No. 1
Screws M16x70 for fixing the gas flange . . . . . No. 8
Screws M16x50 to secure the burner flange to the boiler . No. 8
Nut M16 . . . . . No. 8
Washer D16 . . . . . No. 16
Gasket DN100 . . . . . No. 1
Screws M8x20 . . . . . No. 4
Instructions . . . . . No. 1
Spare parts list . . . . . No. 1

3.14 Servomotor (SQM48.4....)

Warnings

WARNING

To avoid accidents, material or environmental damage, observe the following instructions!

Avoid opening, modifying or forcing the actuators.

➤ All interventions (assembly and installation operations, assistance, etc.) must be carried out by qualified personnel.
➤ Before modifying the wiring in the SQM4... system connection area, fully disconnect the burner control device from the power supply (omnipolar separation).
➤ To avoid the risk of electrocution, protect the connection terminals in a suitable manner and correctly fix the cover.
➤ Check the wiring is in order.
➤ Falls and collisions can negatively affect the safety functions. In this case, the unit must not be operated, even if it displays no evident damage.

Assembly notes

- Check the relevant national safety standards are respected.
- The connection between the actuator command shaft and the control element must be rigid, without any mechanical play.
- To avoid an excessive load on the bearings due to rigid hubs, the use of compensation clutches without any mechanical play is recommended (e.g. metal bellows-type clutches).

Installation notes

- Arrange the H.V. ignition cables separately, as far as possible from the control box and the other cables.
- To avoid the risk of electrocution, make sure that the 230V AC section of the SQM4... unit is fully separated from the functional low-voltage section.
- The static torque is reduced when the electrical supply of the actuator is switched off.
- The housing cover may only be removed for short periods of time for wiring or when making the addressing. In similar cases, make sure that dust or dirt does not penetrate inside the actuator.
- The actuator comprises a PCB with ESD-sensitive components.
- The top side of the board carries a cover which affords protection against direct contact. This protective cover must not be removed! The underside side of the board must not be touched.

WARNING

During the maintenance or replacement of the actuators, be careful not to invert the connectors.

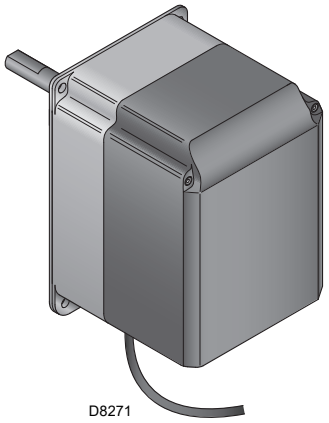

Fig. 9

Technical data

Operating voltage	AC 2 x 12 V via bus cable from the base unit or via a separate transformer
Safety class	extra low-voltage with safe isolation from mains voltage
Power consumption	26...34 VA
Degree of protection	to EN 60 529, IP 54, provided adequate cable entries are used
Cable connection	RAST3. 5 connectors
Rotation direction	- Anticlockwise (standard) - Clockwise (inverted rotation)
Nominal torque (max)	20 Nm
Holding torque (max)	20 Nm
Running time (min.) for 90°	30 s.
Weight	1,6 kg approx.
Environmental conditions:	
Operation	DIN EN 60 721-3-3
Climatic conditions	Class 3K3
Mechanical conditions	Class 3M3
Temperature range	-20...+60 °C
Humidity	< 95% UR

Tab. G

3.15 AZL Display...

Warnings

WARNING

To avoid accidents, material or environmental damage, observe the following instructions!

The AZL ... display is a safety device! Avoid opening or modifying it, or forcing its operation. Riello S.p.A. cannot assume any responsibility for damage resulting from unauthorised interventions!

The electronic cam is operated and programmed through the AZL5 interface... or with the aid of a PC.

The AZL5 has a backlit LCD display with clear reading of the menu text and diagnostics.

The Modbus function of the AZL display integrates the electronic cam LMV5 and through data management allows the diagnostic of the burner.

The display shows the operating status, the types of errors and lockouts. Used to parameterize and monitor data.

Fig. 10

Technical data

Operating voltage	AC 24 V - 15% / +10%
Power consumption	< 5W (typical)
Protection level of the container – Rear – Front	 IP00 according to IEC 529 IP54 according to IEC 529 (if installed)
Safety class	I with parts II and III according to DIN EN 60730-1
Battery - Manufacturer:	**Type reference:**
VARTA DURACELL SANYO ELECTRIC, Osaka/ Japan RENATA AG, Itingen/CH	CR 2430 (LF-1/2 W) DL 2430 CR 2430 (LF-1/2 W) CR 2430

Tab. H

3.16 Control box for the air/fuel ratio (LMV51...)

Warnings

WARNING

To avoid accidents, material or environmental damage, observe the following instructions!

The LMV52 control box... is a safety device! Avoid opening or modifying it, or forcing its operation. Riello S.p.A. cannot assume any responsibility for damage resulting from unauthorised interventions!

Risk of explosion!

An incorrect configuration can provoke fuel overcharging, with the consequential risk of explosion! Operators must be aware that incorrect settings made on the AZL5… display and operating unit and incorrect settings of the fuel and / or air actuator positions can lead to dangerous burner operating conditions.

➤ All interventions (assembly and installation operations, assistance, etc.) must be carried out by qualified personnel.

➤ Before modifying the wiring in the LMV52 control box connection area, fully disconnect the system from the power supply (omnipolar separation). Check the system is not powered and cannot be accidentally reconnected. Failure to do this will lead to the risk of electrocution.

➤ Protection against electrocution from the LMV5... control box and all connected electric components is obtained with correct assembly.

➤ Before any intervention (assembly and installation operations, assistance, etc.), ensure the wiring is in order and that the parameters are correctly set, then make the safety checks.

➤ Falls and collisions can negatively affect the safety functions.
In this case, the control box must not be operated, even if it displays no evident damage.

➤ In programming mode, the position check of actuators and VSD (checking electronic fuel / air ratio control) is different from the check during automatic operation.
As for automatic operation, the actuators are guided together to the positions requested and, if an actuator does not reach the position requested, adjustments are made until the position is actually reached. However, in contrast to automatic operation, there are no time limits to these corrective actions.
The other actuators maintain their positions until all actuators have reached the positions currently required.
This is absolutely important to set the fuel / air ratio control system.
During the time the fuel / air ratio curves are being programmed, the person making the plant settings must continuously monitor the quality of the combustion process (e.g. by means of a flue gas analyser).
Also, if combustion levels are poor, or in the event of dangerous situations, the commissioning engineer must take appropriate action (e.g. switching off manually).

To ensure the safety and reliability of the LMV5... system, the following instructions must also be followed:

– avoid conditions that can favour the development of condensate and humidity. Otherwise, before switching on again, make sure that the entire control box is perfectly dry!
– Static charges must be avoided since they can damage the control box's electronic components when touched.

D9301

Fig. 11

Mechanical structure

The LMV5... control box is a system to check the burners, based on a microprocessor and equipped with components to adjust and monitor medium and large capacity forced draught burners.
The base control box of the LMV5... system incorporates the following components:

- Burner adjustment device with system for checking the seal of the gas valves
- Electronic device to check the fuel/air ratio with a maximum of 6 actuators
- Optional PID temperature / pressure controller (load controller)

Installation notes

- Check the electric wiring inside the boiler complies with the national and local safety regulations.
- Do not confuse the powered conductors with the neutral ones.
- Make sure the cable grommets of the connected cables comply with the relevant standards (e.g. DIN EN 60730 and DIN EN 60 335).
- Ensure that spliced wires cannot get into contact with neighbouring terminals. Use adequate ferrules.
- Arrange the H.V. ignition cables separately, as far as possible from the control box and the other cables.
- The burner manufacturer must protect unused AC 230V terminals with dummy plugs (refer to sections Suppliers of other accessory items).
- When wiring the unit, make sure that AC 230V mains voltage cables are run strictly separate from extra low-voltage cables to avoid risks of electrical shock hazard.

Electrical wiring of the flame detector

It is important for signal transmission to be almost totally free of any disturbances or loss:

- Always separate the detector cables from the other cables:
  – Line capacitance reduces the magnitude of the flame signal.
  – Use a separate cable.
- Respect the allowed cable lengths.

Technical data

LMV52... base control box	Mains voltage	AC 230V -15% / +10%
	Mains frequency	50 / 60 Hz ±6%
	Power absorption	< 30W (normal)
	Safety class	I, with components in compliance with II and III, according to DIN EN 60730-1
Load on 'input' terminals	F1 unit fuse (internal)	6.3 AT
	Primary perm. mains fuse (external)	Max. 16 AT
	Undervoltage • Safety switch-off from operating position to mains voltage • Restart when mains voltage picks up	 < AC 186V > AC 188V
	Oil pump / magnetic clutch (nominal voltage) • Nominal current • Power factor	 2A cosφ > 0.4
	Air pressure switch test valve (nominal voltage) • Nominal current • Power factor	 0.5A cosφ > 0.4
Load on 'output' terminals	**Total load on the contacts:** • Mains voltage • Total unit input current (safety circuit) load on contacts due to: - Fan motor contactor - Ignition transformer - Valve - Oil pump / magnetic clutch	 AC 230V -15 % / +10% Max. 5 A
	Single contact loading: Fan motor contactor (nominal voltage) • Nominal current • Power factor	 1A cosφ > 0.4
	Alarm output (nominal voltage) • Nominal current • Power factor	 1A cosφ > 0.4
	Ignition transformer (nominal voltage) • Nominal current • Power factor	 2A cosφ > 0.2
	Fuel gas valve (nominal voltage) • Nominal current • Power factor	 2A cosφ > 0.4
	Fuel oil valve (nominal voltage) • Nominal current • Power factor	 1A cosφ > 0.4
Cable length	Main line	Max. 100 m (100 pF / m)
Environmental conditions	Operation Climatic conditions Mechanical conditions Temperature range Humidity	DIN EN 60721-3-3 Class 3K3 Class 3M3 -20...+60°C < 95% RH

Tab. I

4 Installation

4.1 Notes on safety for the installation

After carefully cleaning all around the area where the burner is to be installed, and arranging for the environment to be illuminated correctly, proceed with the installation operations.

DANGER

All the installation, maintenance and disassembly operations must be carried out with the electricity supply disconnected.

WARNING

The installation of the burner must be carried out by qualified personnel, as indicated in this manual and in compliance with the standards and regulations of the laws in force.

DANGER

Combustion air inside the boiler must be free from hazardous mixes (e.g.: chloride, fluoride, halogen); if present, it is highly recommended to carry out cleaning and maintenance more frequently.

4.2 Handling

The burner packaging includes a wooden platform, it is therefore possible to move the burner (still packaged) with a transpallet truck or fork lift truck.

WARNING

The handling operations for the burner can be highly dangerous if not carried out with the greatest attention: keep any unauthorised people at a distance; check the integrity and suitableness of the available means of handling.
Check also that the area in which you are working is empty and that there is an adequate escape area (i.e. a free, safe area to which you can quickly move if the burner should fall).
When handling, keep the load at not more than 20-25 cm from the ground.

After positioning the burner near the installation point, correctly dispose of all residual packaging, separating the various types of material.

CAUTION

Before proceeding with the installation operations, carefully clean all around the area where the burner will be installed.

4.3 Preliminary checks

Checking the consignment

CAUTION

After removing all the packaging, check the integrity of the contents. In the event of doubt, do not use the burner; contact the supplier.

The packaging elements (wooden cage or cardboard box, nails, clips, plastic bags, etc.) must not be abandoned as they are potential sources of danger and pollution; they should be collected and disposed of in the appropriate places.

Checking the characteristics of the burner

Check the identification label of the burner, showing:
- the model (**A**)(Fig. 12) of burner;
- the year of manufacture, in cryptographic form (**C**);
- the data for electrical supply and the protection level (**D**);
- the maximum viscosity of the light oil (**E**)
- the types of gas used and the relative supply pressures (**F**);
- the data of the burner's possible minimum and maximum output (**G**) (see Firing rate).
  Warning. The burner output must be within the boiler's firing rate.

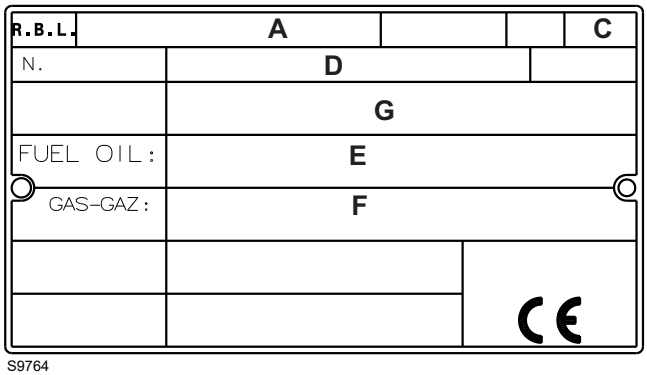

Fig. 12

WARNING

A burner label that has been tampered with, removed or is missing, along with anything else that prevents the definite identification of the burner makes any installation or maintenance work difficult.

4.4 Operating position

WARNING

- The burner is set up to work only in positions **1** and **4** (Fig. 13).
- Installation **1** is preferable, as it is the only one that allows the maintenance operations as described in this manual.
- The installation **4** permits the operation, but makes maintenance and inspection operations of the combustion head more difficult.

DANGER

- Any other position could compromise the correct operation of the appliance.
- Installation **5** is prohibited for safety reasons.

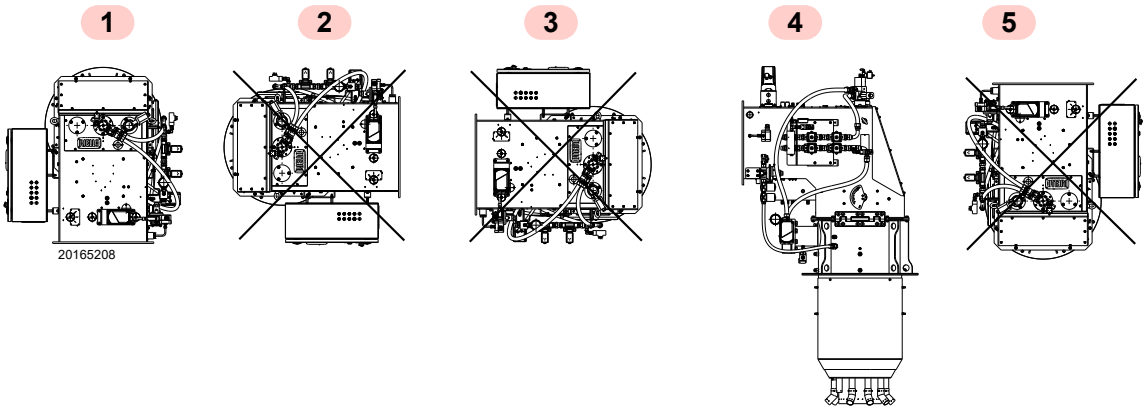

Fig. 13

4.5 Removing the shutter lockout pins

Remove the pins 1)-2) and nuts before fitting the burner onto the boiler (Fig. 14).

Replace them with the screws 3) M8x20 supplied as standard.

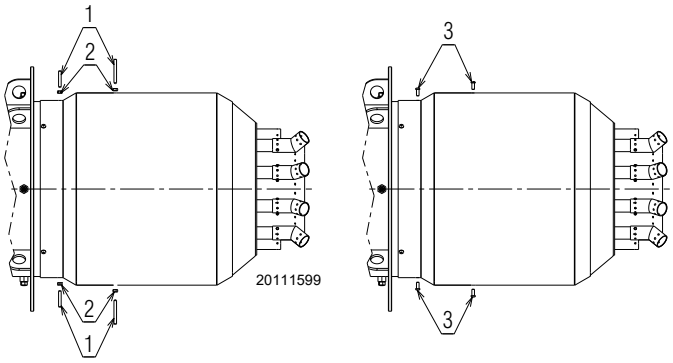

Fig. 14

4.6 Preparing the boiler

4.6.1 Boring the boiler plate

Pierce the closing plate of the combustion chamber, as in Fig. 15.

The position of the threaded holes can be marked using the thermal insulation screen supplied with the burner.

4.6.2 Blast tube length

The length of the blast tube must be selected according to the indications provided by the manufacturer of the boiler, and in any case it must be greater than the thickness of the boiler door complete with its fettling.

For boilers with front flue passes (Fig. 17), or with a flame inversion chamber, a protection in refractory material must be made to allow the blast tube to be extracted.

For boilers with a water-cooled frontal, a refractory lining is not necessary unless expressly requested of the boiler manufacturer.

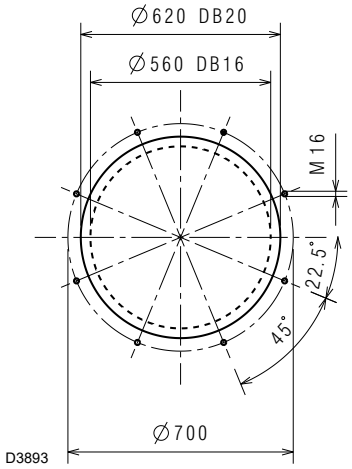

Fig. 15

4.7 Lifting points

Prepare a suitable lifting system using the rings shown in Fig. 16.

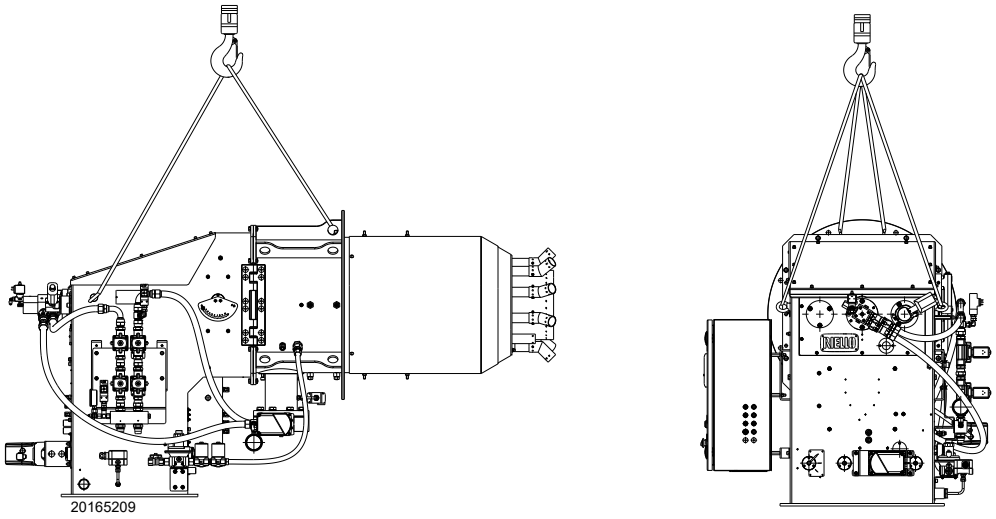

Fig. 16

4.8 Boiler fixing

The picture Fig. 17 indicates how to attach the burner to a boiler equipped with a non-cooled frontal piece.

It is recommended that the head protrusion should not exceed 200 mm.

Model	Min. (mm)	Max. (mm)
DB 16 LSE	340	540

Tab. J

However, the refractory wall must not extend beyond the end of the combustion head of the burner.

WARNING

The seal between burner and boiler must be airtight.

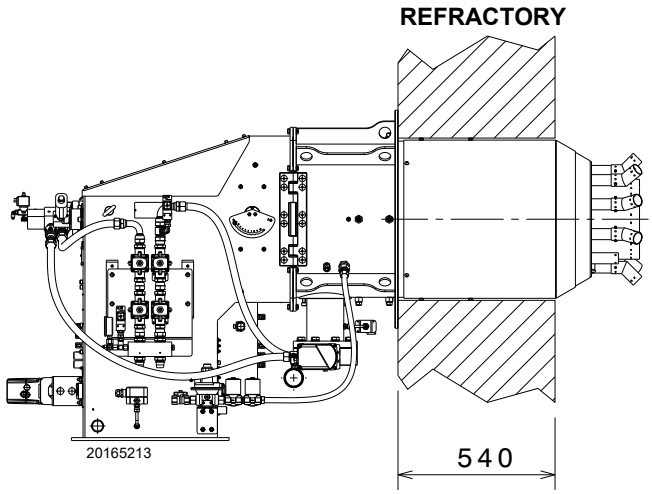

Fig. 17

4.9 Access to head internal part

To access the inside of the combustion head (Fig. 18) proceed as follows:

- ➤ remove the cover of the air conveyor 1) and the plate 3);
- ➤ remove the flame sensor 2);
- ➤ disconnect the flexible hoses 3) from the oil lance;
- ➤ loosen the screw 4) and remove the oil lance 5);
- ➤ remove the plate 6);
- ➤ remove the electrical wiring 7) of the pilot;
- ➤ remove the ignition pilot 8) after unscrewing the nut 9);
- ➤ unscrew the fixing screws 10) of the head 11);
- ➤ remove the head 1).

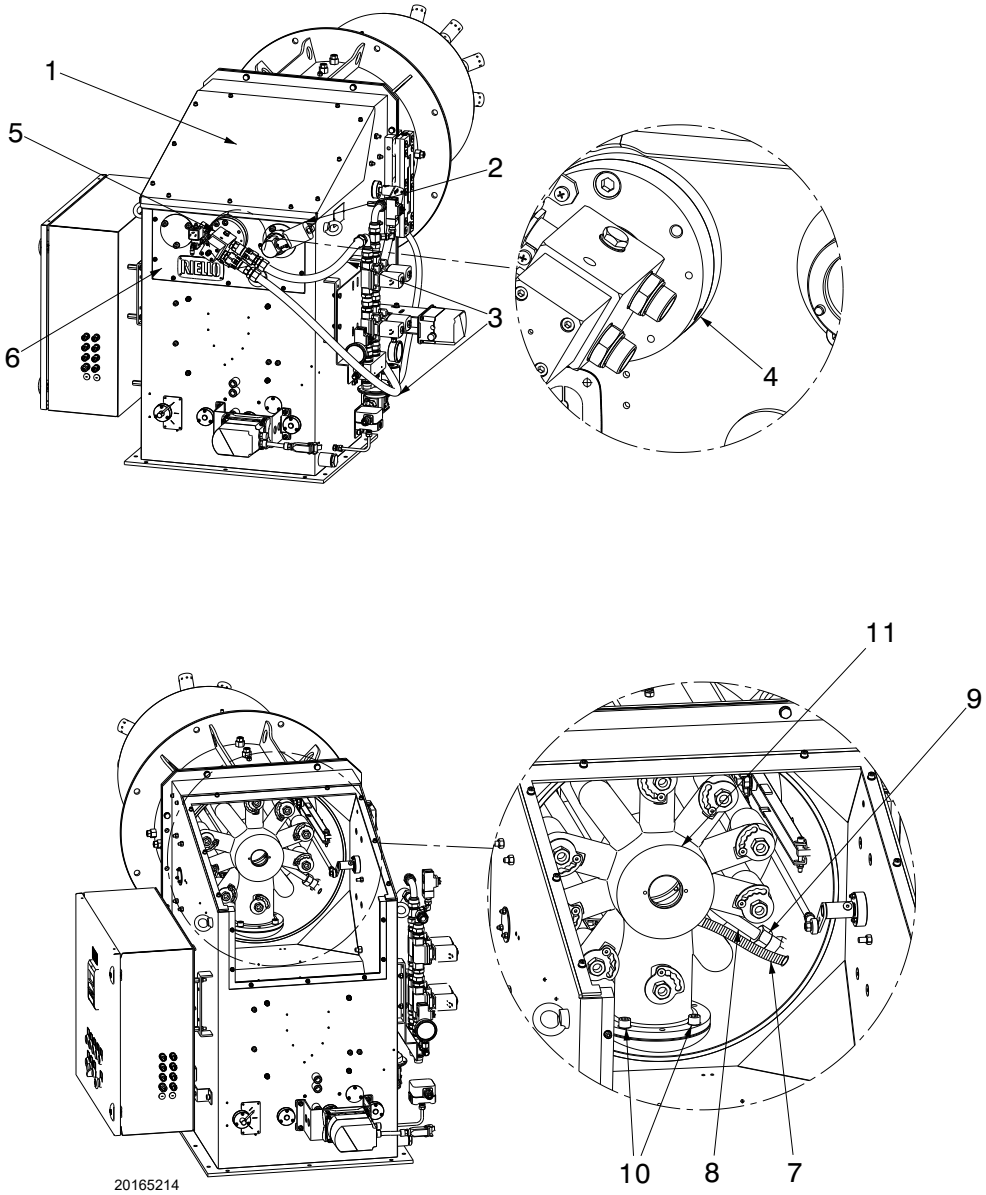

Fig. 18

4.10 Nozzles

The burner complies with the emission requirements of the EN 267 standard.

In order to guarantee that emissions do not vary, recommended and/or alternative nozzles specified by Riello in the Instruction and warning booklet should be used.

WARNING

It is advisable to replace the nozzle once a year during periodical maintenance.

CAUTION

The use of nozzles other than those specified by Riello S.p.A. and inadequate regular maintenance may result into emission limits non-conforming to the values set forth by the regulations in force, and in extremely serious cases, into potential hazards to people and objects.

The manufacturing company shall not be liable for any such damage arising from non-observance of the requirements contained in this manual.

Fit the nozzle with the 24 mm wrench.
To calibrate the flow rate in the nozzle, adjust the combustion pressure on the nozzle return flow as shown in graphic of Fig. 23 on page 22.

WARNING

- ➤ Do not use any sealing products such as gaskets, sealing compound, or tape.
- ➤ Be careful to avoid damaging the nozzle sealing seat.
- ➤ The nozzle must be screwed into place tightly but not to the maximum torque value provided by the wrench.

4.10.1 Recommended nozzles

Bergonzo type CT5 angle 45° (300 - 1500 kg/h).

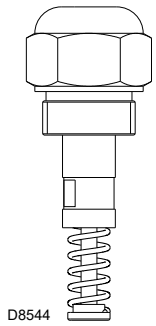

Fig. 19

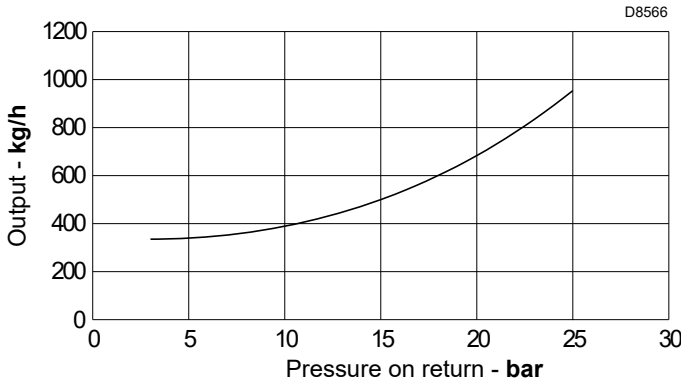

Fig. 20

4.11 Mechanical atomization lance

For the replacement of the sealing rings 1) 2) 3) and 4)(Fig. 21) we recommend the purchase of the O-Ring kit code 20019166.

The pneumatic actuation valve of the lance operates with compressed air at a pressure of 5 ÷ 7 bar.

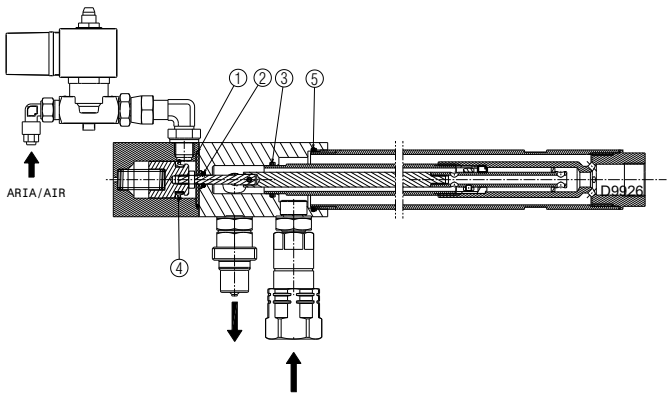

Fig. 21

4.12 Ignition pilot

WARNING

Place the electrode at a distance from the hole, as shown in Fig. 22.

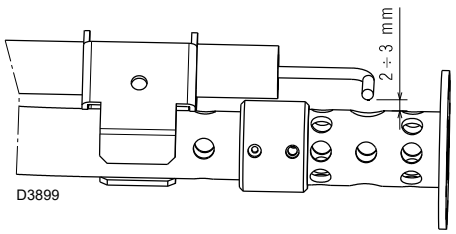

Fig. 22

4.13 Light oil supply

Explosion danger due to fuel leaks in the presence of a flammable source.

Precautions: avoid knocking, attrition, sparks and heat.

Make sure the fuel interception tap is closed before performing any operation on the burner.

WARNING

The fuel supply line must be installed by qualified personnel, in compliance with current standards and laws.

4.13.1 General supply layout (example)

An example of the burner's hydraulic diagram is shown in Fig. 23.

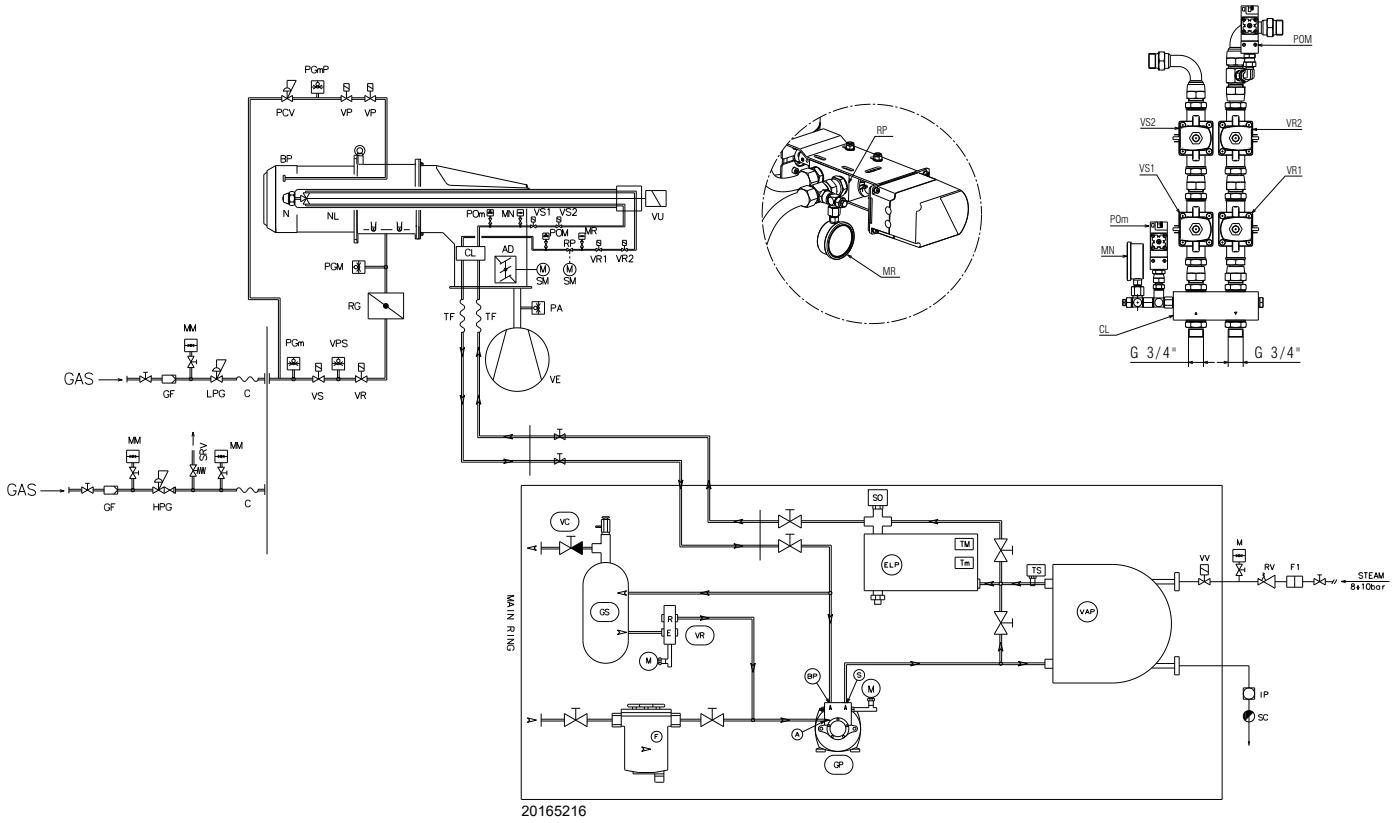

Fig. 23

Key (Fig. 23)

AD	Air damper
BP	Pilot burner
C	Anti-vibration joint
CL	Oil collector
GF	Gas filter
HPG	High gas pressure regulator
IP	Flow indicator
LPG	Low gas pressure regulator
MM	Pressure gauge
MN	Oil delivery pressure gauge
MR	Oil return pressure gauge
N	Nozzle
NL	Oil lance
PA	Minimum air pressure switch
PCV	Gas pressure regulator for pilot
PGM	Maximum gas pressure switch
PGm	Minimum gas pressure switch
PGmP	Minimum gas pressure switch for pilot
PO	Maximum oil pressure switch
RG	Gas butterfly valve
RP	Oil return pressure regulator
SM	Servomotor
RV	Pressure limiting valve with outlet into the environment
VE	Fan
VP	Pilot solenoid valves
VPS	Leak detection control device for solenoid valves
VR	Gas adjustment solenoid valve
VR1	Oil safety valve on return
VR2	Oil safety valve on return
VS	Gas safety solenoid valve
VS1	Oil safety valve on delivery
VS2	Oil safety valve on delivery
VU	Pneumatic actuation valve for lance/nozzle

4.13.2 Adjustment and calibration of the oil circuit and of the air output

The oil supply system requires that suction of the fuel occurs from a degassing tank, using a self-priming pump, and that the fuel is sent to the burner at the correct pressure.

This pressure is calibrated using the regulator built into the pump (Fig. 24) after having unscrewed the protection plug (to regulate the pressure, see the attached diagrams of the nozzles.

The modulation of the oil flow rate is carried out using the pressure adjuster 1)(Fig. 25).

This functions by varying the return pressure from the nozzle; this pressure can be measure using the pressure gauge 2)(Fig. 25) after slightly unscrewing the valve 3) (it is advisable, when the burner is operating normally, to keep the valves 3) of the pressure gauges closed to prevent any water hammers damaging them).

To set the delivery range within which the nozzle must work, nozzle return line fuel maximum and minimum pressure must be adequately adjusted.

For correct functioning at the minimum, the return pressure, read on the pressure gauge 2), must be approx 4 - 5 bar.

- ➤ Regulator to **0°** (maximum opening) = minimum pressure on the nozzle return line;
- ➤ Regulator to **90°** (minimum opening) = maximum pressure on the nozzle return line.

The servomotor is operated by the electronic cam in the boiler's general panel thanks to this device, it is possible to set different curves for oil and gas on the same servomotor (also for the air damper servomotor 10)(Fig. 8 on page 12).

- ➤ When **adjusting the gas**, it is recommended the servomotor be adjusted to about 90° to reduce leaks from the gas butterfly valve.
- ➤ When **adjusting the oil**, the adjustment is done based on the nozzle fitted and on the required degree of modulation; in a situation of minimum firing rate, a rotation of 20°can be enough.

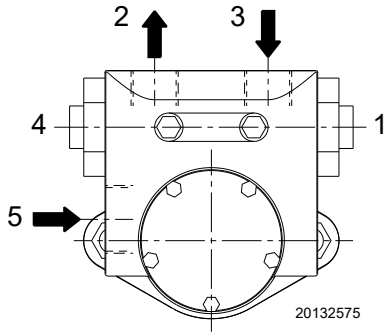

Fig. 24

Key (Fig. 24)
1 Gauge connection
2 Delivery
3 Return
4 Pressure adjuster (unscrew the plug)
5 Suction line

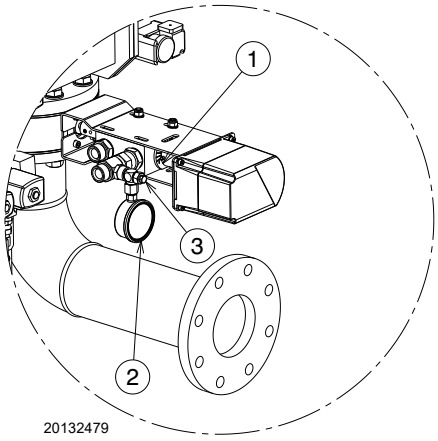

Fig. 25

4.13.3 Priming pump (example)

WARNING

Before starting the burner, make sure that the tank return line is not clogged.

Obstructions in the line could cause the sealing organ located on the pump shaft to break.

➤ In order for self-priming to take place, the screw 4) on the pump (Fig. 26) must be loosened to bleed off the air contained in the suction line.
➤ Start the burner by closing the remote controls. As soon as the burner starts, check the direction of rotation of the fan blade.
➤ The pump can be considered to be primed when the light oil starts coming out of the screw 4).
➤ Close the burner and undo the screws 4).

The time required for this operation depends upon the diameter and length of the suction tubing.

If the pump fails to prime at first start-up and the burner locks out, wait approx. 15 seconds, reset the burner, and then repeat the start-up operation. And so on.

After 5 or 6 starting operations allow 2 or 3 minutes for the transformer to cool.

Do not light up the flame sensor or the burner will lock out; the burner should lock out anyway about 10 seconds after it starts.

WARNING

The above-mentioned operation is possible because the pump is already full of fuel when it leaves the factory.

If the pump has been drained, fill it with fuel through the opening on the vacuometer 3)(Fig. 26) prior to starting; otherwise, the pump will seize.

Whenever the length of the suction piping exceeds 20-30 meters, the supply line must be filled using a separate pump.

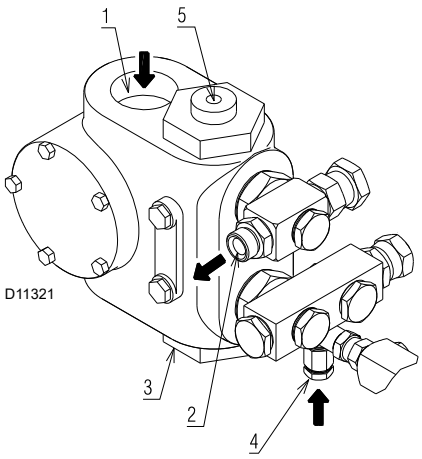

Fig. 26

Key (Fig. 26)
1 Suction line
2 Return line
3 Vacuometer connection
4 Manometer connection
5 Pressure adjuster

4.14 Gas feeding

Explosion danger due to fuel leaks in the presence of a flammable source.

Precautions: avoid knocking, attrition, sparks and heat.

Make sure the fuel interception tap is closed before performing any operation on the burner.

WARNING

The fuel supply line must be installed by qualified personnel, in compliance with current standards and laws.

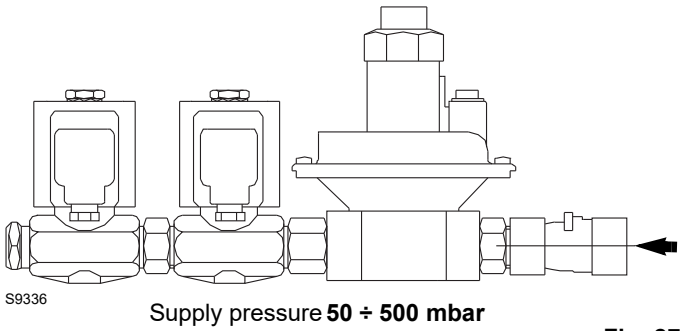

Supply pressure **50 ÷ 500 mbar**

Fig. 27

4.14.1 Gas feed connection to the burner

Burner connection

The connection of the burner to the gas train is carried out using the flange connection.

The dimensions of the flange are given in Fig. 8 on page 12.

Use the relative adapters to connect the gas flange to the train, supplied as accessories.

Pilot burner connection

The burner is fitted with a dedicated gas train that is fixed above the pipe coupling.

It should be connected to the main train downstream the filter or the pressure adjuster (depending on configuration).

Fig. 27 shows the version for a natural gas feed.

4.14.2 General gas feeding layout (example)

Key (Fig. 28)

BP	Pilot burner
C	Vibration damping joint
HPG	High gas pressure regulator
LPG	Low gas pressure regulator
MM	Pressure gauge
PA	Minimum air pressure switch
PCV	Pilot gas pressure regulator
PGM	Maximum gas pressure switch
PGm	Minimum gas pressure switch
RG	Gas butterfly valve
SRV	Pressure limiting valve with outlet into the environment
VE	Fan
VP	Pilot solenoid valves
VPS	Leak detection control device
VR	Gas pressure regulator solenoid valve
VS	Gas safety solenoid

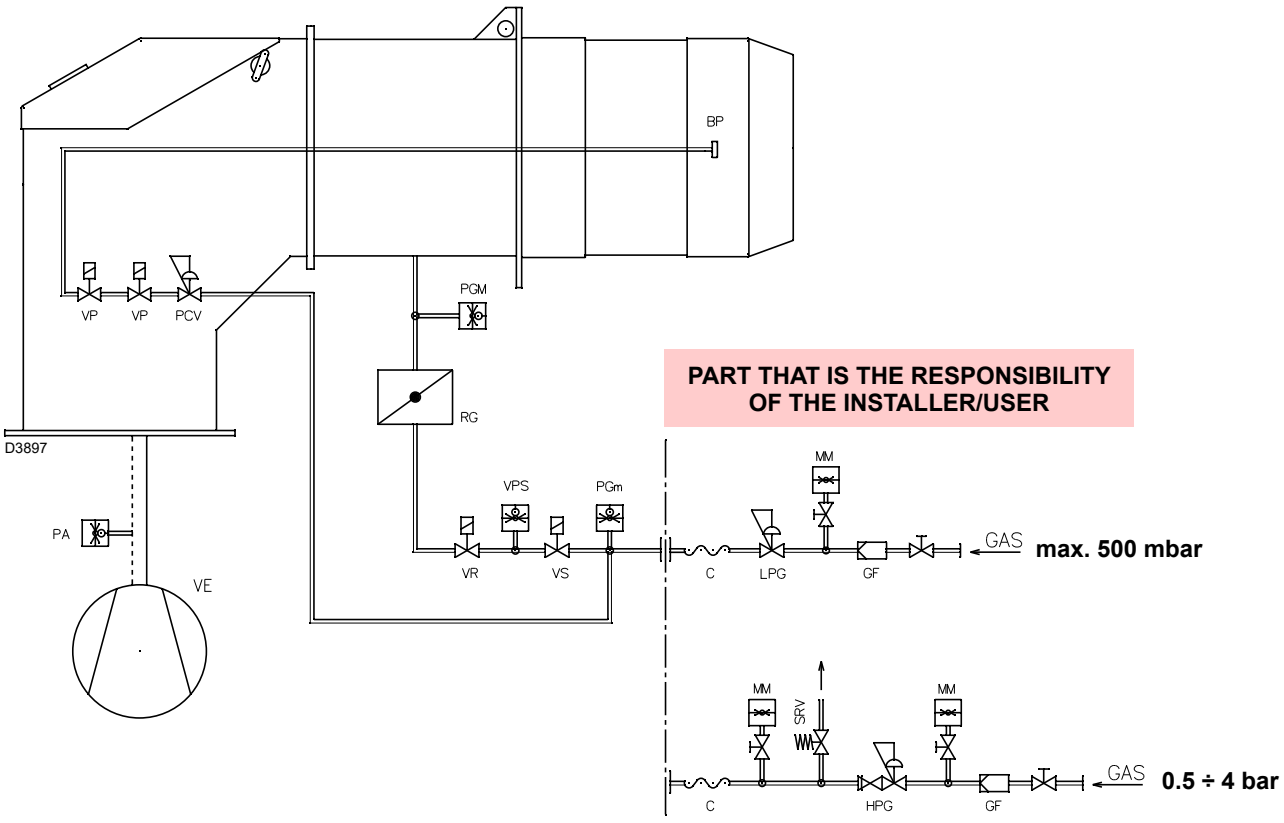

Fig. 28

4.14.3 Gas train

Approved according to standard EN 676 and provided separately from the burner.

4.14.4 Gas train installation

DANGER

Disconnect the electrical power using the main switch.

Check that there are no gas leaks.

Pay attention when handling the train: danger of crushing of limbs.

Make sure that the gas train is properly installed by checking for any fuel leaks.

The operator must use the required equipment during installation.

The gas train is set up to be connected to the burner at the flange 2)(Fig. 29).

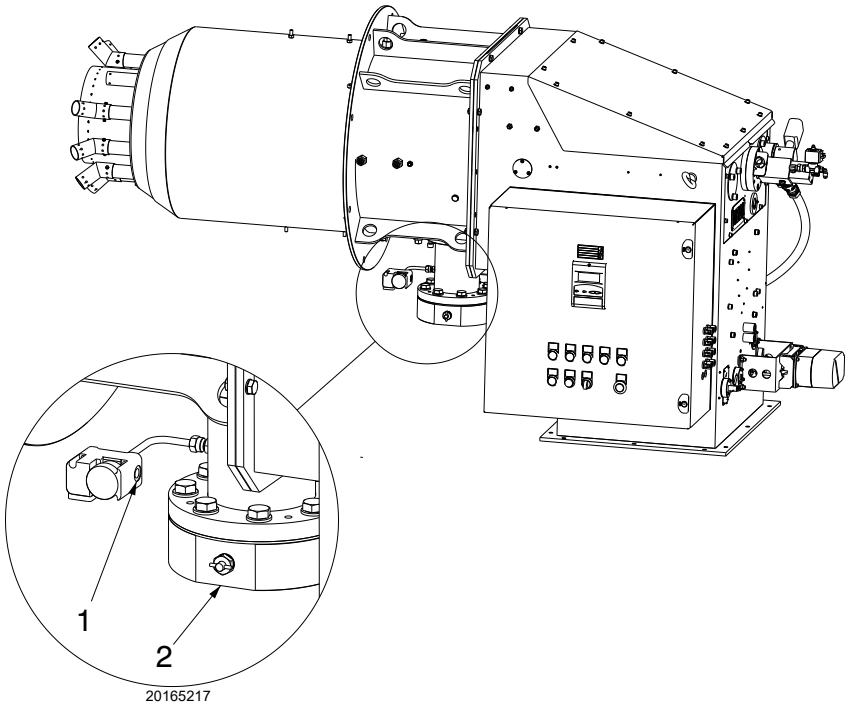

Fig. 29

4.14.5 Pilot - gas train connection

The burner is fitted with a dedicated gas train that is fixed to the pipe coupling.

➤ It should be connected to the main train downstream the filter or the pressure adjuster (depending on configuration).

WARNING

Supply pressure 68 ÷ 500 mbar.

4.15 FGR duct system

– Normally the duct would connect to the stack as shown in Fig. 30, with a 45° cut facing the flue gas flow and with the center of the cut centered in the stack.
The duct could be made to the flue gas duct of the boiler, but must still be located with the same 45° cut facing the flue gas flow stream and with the center of the cut in the centre of the stream.

– The duct should be routed in a manner that has the minimum number of elbows and provides for the normal expansion and contraction of the piping.
Long duct runs can change length by several centimeters and can put an extreme load on the connecting points that could cause component failures.
The design must include offsets that will allow for the required movement of the piping without undue force on the burner or stack.

– Duct expansion and contraction can be managed by using two relatively long duct runs that are 90° apposed to each other.
A small movement in the angle between these two legs will provide the space needed to absorb the expansion and contraction. The ends of the FGR duct must be securely attached to allow this to work properly, and prevent high loads from being applied to the burner or stack.

– A condensation drip leg must be provided upstream of the FGR control valve and the FGR shutoff valve (if used). There must be sufficient condensate drip legs and catch space (volume of drip legs) to prevent the condensation from flowing through the control valves and into the fan.
In cases of heavy condensation, a condensate drip leg may be required on the bottom of the duct 8)(Fig. 30), to remove condensate.

CAUTION

Uncontrolled condensation can cause premature failure of the control valves, fan and motor.

Adequate means must be provided to remove condensation from the system.

Cold start-up will generate significant amounts of condensation.

– Determine if pipe reducers are needed for the connection to the FGR control valve and the FGR shutoff valve.

– The duct must be properly supported, handling both the weight of the duct and to control the thermal expansion and contractions. The supports may need to be anchored to provide this stability in the FGR duct.

– The FGR duct 3)(Fig. 30) is normally made from DN200 pipe because it is easily obtainable and inexpensive.
DN150 pipe can also be used for this application.

– The duct components must be seal welded, flanged or screwed together to provide flue gas tight duct.
Flue gas leakage into the duct will prevent the system from working properly. It is sufficient to only inspect the welds for a proper seal or gaskets, they do not need to be leak tested.

WARNING

The flue gas recirculation ducts must be made of stainless steel to prevent corrosion due to condensation.

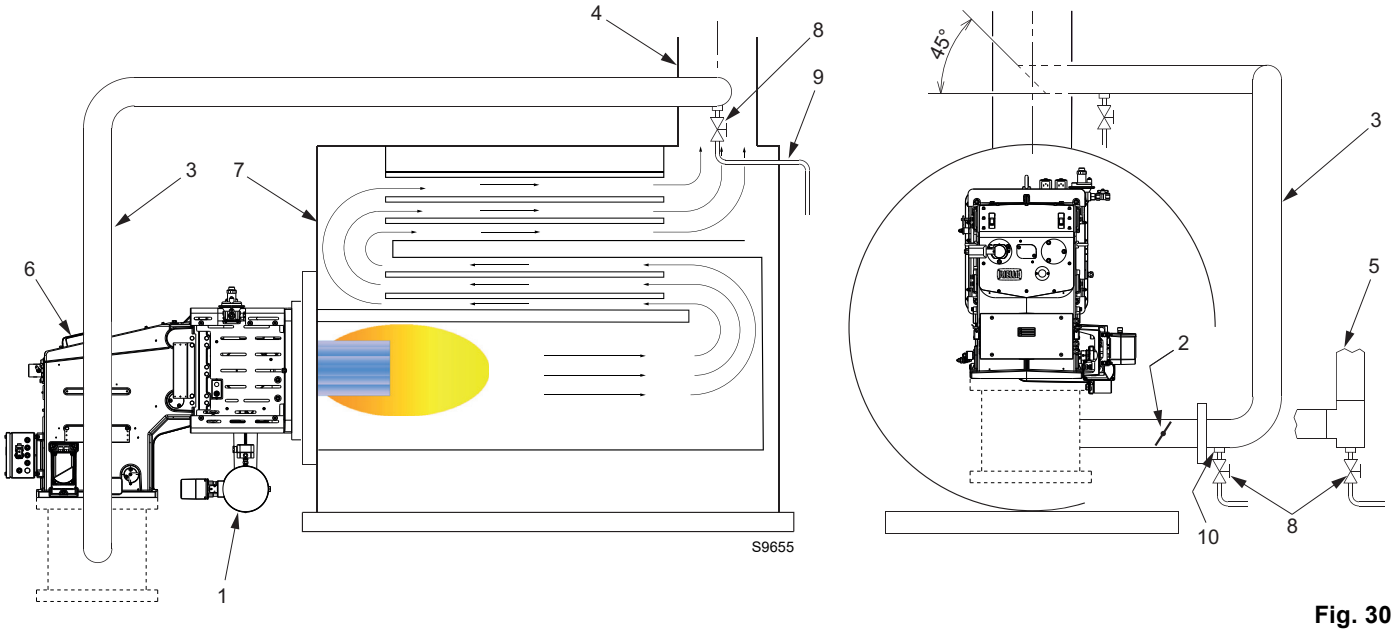

Fig. 30

Key (Fig. 30)
1 Primary gas supply inlet
2 Inducted FGR modulating damper
3 Flue gas recirculation pipe
4 Boiler stack
5 Alternate construction using “T”
6 Burner
7 Boiler
8 Drain valve (manual ball valve, stainless steel)
9 Drain line
10 Condensate trap

4.16 Electrical wiring

Notes on safety for the electrical wiring

DANGER

- The electrical wiring must be carried out with the electrical supply disconnected.
- Electrical wiring must be made in accordance with the regulations currently in force in the country of destination and by qualified personnel. Refer to the wiring diagrams.
- The manufacturer declines all responsibility for modifications or connections different from those shown in the wiring diagrams.
- Check that the electrical supply of the burner corresponds to that shown on the identification label and in this manual.
- The burner is set up for continuous operation.
  This means they should compulsorily be stopped at least once every 72 hours to enable the control box to perform checks of its own start-up efficiency. Normally, burner stopping is guaranteed by the boiler's thermostat/pressure switch. If this is not the case, a time switch should be fitted in series to TL to stop the burner at least once every 72 hours. Refer to the wiring diagrams.
- The electrical safety of the device is obtained only when it is correctly connected to an efficient earthing system, made according to current standards. It is necessary to check this fundamental safety requirement. In the event of doubt, have the electrical system checked by qualified personnel. Do not use the gas tubes as an earthing system for electrical devices.
- The electrical system must be suitable for the maximum power absorption of the device, as indicated on the label and in the manual, checking in particular that the section of the cables is suitable for that level of power absorption.
- For the main power supply of the device from the electricity mains:
  - do not use adapters, multiple sockets or extensions;
  - make provisions for an omnipolar switch with a gap between the contacts of at least 3 mm (over-voltage category III), as required by current safety regulations.
- Do not touch the device with wet or damp body parts and/or in bare feet.
- Do not pull the electric cables.

Before carrying out any maintenance, cleaning or checking operations:

DANGER

Turn off the burner's power supply using the main system switch.

DANGER

Turn off the fuel interception tap.

DANGER

Avoid condensate, ice and water leaks from forming.

If the cover is still present, remove it and proceed with the electrical wiring according to the wiring diagrams.

Use flexible cables in compliance with the EN 60 335-1 standard.

DANGER

Before making any connections, consult the electrical system in the appendix of this instruction manual.

4.16.1 Supply cables and external connections passage

All the cables to be connected to the burner are passed through cable grommets, either by making holes on the electric box or by using the holes with plugs, as shown in Fig. 31.

Key (Fig. 31)
1 Ignition transformer
2 Terminal board
3 Electronic cam transformer LM
4 Plugs for external inputs

After carrying out maintenance, cleaning or checking operations, reassemble the cover and all the safety and protection devices of the burner.

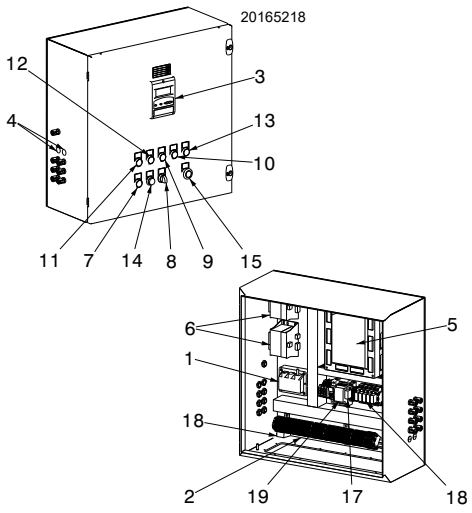

Fig. 31

Legenda (Fig. 31)
1 Ignition transformer
2 Terminal board
3 AZL display
4 Plugs for external inputs
5 LMV electronic cam
6 Electronic cam transformer
7 POWER ON signal button
8 GAS/OFF/OIL burner selector
9 FAN MOTOR ON signal light
10 PUMP MOTOR ON signal light
11 BURNER ON GAS signal light
12 BURNER ON GAS signal light
13 LANCE OIL POSITION READY signal light
14 LOCKOUT RESET button
15 Emergency/Stop button
16 Clear contacts relay
17 Auxiliary fuse
18 Filter
19 220/24V feeder

5 Start-up, calibration and operation of the burner

5.1 Notes on safety for the first start-up

WARNING

The first start-up of the burner must be carried out by qualified personnel, as indicated in this manual and in compliance with the standards and regulations of the laws in force.

WARNING

Check the correct working of the adjustment, command and safety devices.

WARNING

Refer to paragraph “Safety test - with gas ball valve closed” on page 34 before the first start-up.

5.2 Combustion head adjustment

In order to optimise performance, the burner is equipped with a variable geometry combustion head which operates on the basis of the delivered output.

The device is connected to the shaft of the servomotor 11)(Fig. 8 on page 12) and using a lever mechanism it transmits the axial movement to the cylinder located in the combustion head.

Before starting up the burner, it is advisable to choose the mobile cylinder stroke on the basis of the maximum output that the burner should deliver, in order to avoid setting a servomotor range that is too short.

The factory regulation corresponds to the maximum output (coupling position: **1**).

Procedure for combustion head adjustment

– Remove the cover on the burner's air box.
– With the help of Tab. K, establish in which hole of lever B the articulated coupling A joined to the mobile shutter should be inserted.
– Fix the articulated coupling in the previously established hole.
– Close the cover again.

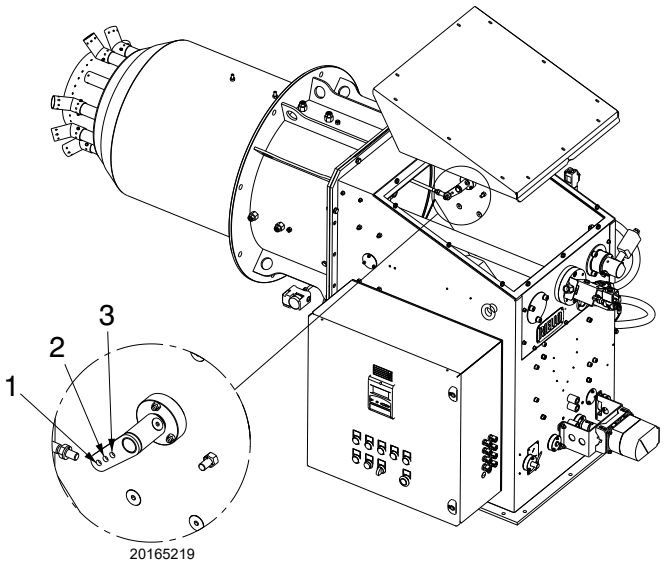

Fig. 32

Coupling position	Output (kW)
3	10000
2	13000
1	16000

Tab. K

5.3 Adjustments prior to ignition (light oil)

WARNING

It is recommended to adjust first the light oil burner and then the gas burner.

Carry out the fuel change with burner off.

The optimum calibration of the burner requires an analysis of the flue gases at the boiler outlet and interventions on the following points.

5.3.1 Nozzle

See information on page 21.

5.4 Burner ignition (light oil)

Set the selector on the general panel to “**ON**”.

Set the fuel selector to “**OIL**” to select light oil fuel.

When the limit thermostat (TL) is closed, the heat request signal should switch on.

At first ignition, there is a momentary drop in fuel pressure due to the filling of the nozzle piping. This lowering of the fuel pressure can cause the burner to lockout and can sometimes give rise to pulsations.

Once the following adjustments have been made, the ignition of the burner must generate a noise similar to the noise generated during operation.

If a burner lockout occurs, refer to the “Release procedure” given in the equipment manual supplied.

5.5 Adjustments prior to ignition (gas)

In addition, the following adjustments must also be made:

- ➤ Slowly open the manual valves situated upstream from the gas train.
- ➤ Adjust the minimum gas pressure switch (Fig. 37) to the start of the scale.
- ➤ Adjust the maximum gas pressure switch (Fig. 36) to the end of the scale.
- ➤ Adjust the air pressure switch (Fig. 35) to the start of the scale.
- ➤ Purge the air from the gas line.
  We recommend using a plastic tube routed outside the building and to purge air until gas is smelt.
- ➤ Fit a U-type pressure gauge or a differential pressure gauge (Fig. 33), with socket (+) on the gas pressure of the pipe coupling and (-) in the combustion chamber.
  The manometer readings are used to calculate MAX burner output.
- ➤ Connect two lamps or testers to the two gas line solenoids to check the exact moment in which voltage is supplied.
  This operation is unnecessary if each of the two solenoid valves is equipped with a pilot light that signals voltage passing through.

CAUTION

Before starting up the burner, it is good practice to adjust the gas train so that ignition takes place in conditions of maximum safety, i.e. with gas delivery at the minimum.

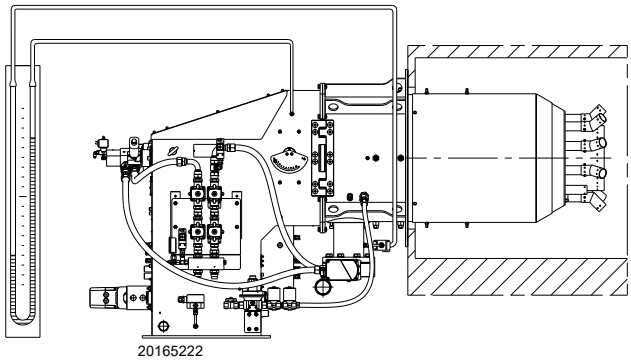

Fig. 33

5.6 Burner start-up (gas)

Close the remote controls and set the selector on the general panel to "**ON**".

Make sure that the lights or testers connected to the solenoids, or the pilot lights on the solenoids themselves, indicate that no voltage is present. If voltage is present, stop the burner immediately and check the electrical connections.

When the limit thermostat (TL) closes, the "**CALL FOR HEAT**" signal should come on (if present on the general panel) and the burner will subsequently begin its starting cycle.

5.7 Ignition pilot burner

For correct functioning, adjust the gas pressure (measured on the socket located on the valve) to between **30 ÷ 50 mbar**.

Gas	mbar	Sm^3/h
G20	1.5	12.3
G31	1.4	3.2

Tab. L

WARNING

Before switching on the main burner, make sure the pilot flame is stable by checking the value of the flame signal on AZL display on the boiler's general panel.

Start the procedure for switching on the burner, making sure the pilot comes on correctly.

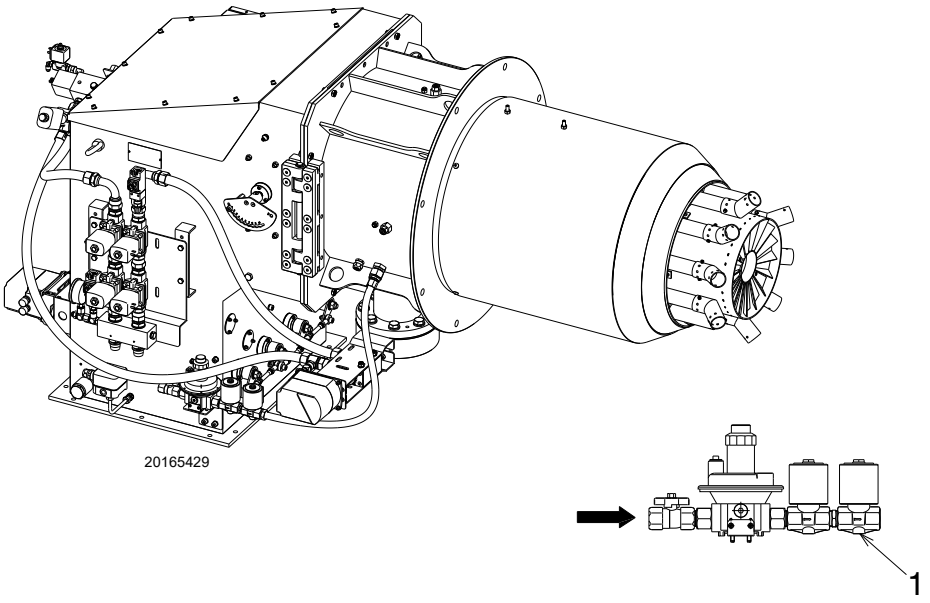

Fig. 34

5.8 Burner ignition

The burner should light after having performed the above steps.

If the starting cycle finishes but the flame does not appear and the control box goes into lockout, reset it and wait for a new ignition attempt.

If ignition is still not achieved, it may be that gas is not reaching the combustion head within the safety time period of 3 seconds; In this case increase gas ignition delivery.

The arrival of the gas at the pipe coupling is shown on the U-type pressure gauge (Fig. 33) or else with the aid of a digital pressure gauge on the pressure test point under the pipe coupling.

If further burner lockouts occur, refer to the “Reset procedure” in the control box manual supplied with the general panel.

Once the burner has fired, now proceed with global calibration operations.

5.9 Combustion air adjustment

Fuel/combustion air synchronisation is done with the relevant servomotors (air and gas) by logging a calibration curve by means of the electronic cam.

It is advisable, to reduce the loss and for a wide calibration field, to adjust the servomotors to the maximum of the output used, the nearest possible to the maximum opening (90°).

On the gas butterfly valve, fuel step according to the burner output required, with servomotor completely open, is carried out by the pressure stabiliser placed on the gas train.

The values shown in Tab. M and Tab. Ncan be used as a reference for calibrating the combustion correctly.

EN 676		Air excess		CO
		Max. output $\lambda \leq 1.2$	Max. output $\lambda \leq 1.3$	
GAS	Theoretical max CO_2 0 % O_2	CO_2 % calibration		mg/kWh
		$\lambda = 1.2$	$\lambda = 1.3$	
G 20	11.7	9.7	9	≤ 1000
G 25	11.5	9.5	8.8	≤ 1000
G 30	14.0	11.6	10.7	≤ 1000
G 31	13.7	11.4	10.5	≤ 1000

Tab. M

EN 267	Air excess		CO
	Max. output $\lambda \leq 1.2$	Max. output $\lambda \leq 1.3$	
Theoretical max CO_2 0 % O_2	CO_2 % calibration		mg/kWh
	$\lambda = 1,2$	$\lambda = 1,3$	
15,2	12,6	11,5	≤ 1000

Tab. N

5.9.1 Air / gas adjustment and output modulation

The burner system for air/fuel adjustment and power modulation performs - in one single control device - a series of integrated functions to obtain optimal energy/operating efficiency from the burner, both for single operation and when combined with other units (e.g. double furnace boiler or several generators working in parallel).

The basic system functions control:

1 the dosage of the air and fuel through positioning using direct servo-commands of the relevant valves eliminating the possible play in the calibration systems with mechanical cam lever mechanisms, used on traditional modulating burners;
2 the modulation of the burner output in accordance with the load required by the system, with maintenance of the pressure or temperature of the boiler at the operating values set;
3 the fine, continuous adjustment of the air flow rate according to the gas analysis made at the flue (O2); this function is dependent on the presence of the O2 kit, containing the PLL module and the QGO2 sensor;
4 the measurement of the combustion yield (this function requires the O2 kit);
5 the sequence (cascade adjustment) of several boilers, suitably connected.

Further interfaces and communication functions with computers, for remote control or integration in central supervision systems are available on the basis of the configuration of the system.

WARNING

The first start up and every further internal setting operation of the adjustment system or the expansion of the base functions require access by means of password and are to be carried out by service personnel who are especially trained for the internal programming of the instrument and the specific application created with this burner.

The first start-up and curve synchronisation manual is supplied with the burner.

At request, the complete manual for the control and setting of all parameters is available.

5.9.2 Pressure switch adjustment

Since the reference pressure values have not yet been established, before starting the calibration operations the following operations need to be carried out (with the burner off):

– open the manual valves upstream of the gas train;
– adjust the minimum gas pressure switch (Fig. 37), on the gas train, to the start of the scale;
– adjust the maximum gas pressure switch (Fig. 36), on the butterfly valve, to the end of the scale;
– adjust the air pressure switch (Fig. 35), on the burner's air box, to the start of the scale.

5.10 Pressure switch adjustment

5.10.1 Air pressure switch

Adjust the air pressure switch after performing all other burner adjustments with the air pressure switch set to the start of the scale (Fig. 35).

With the burner operating at MAX. output, increase adjustment pressure by slowly turning the relative knob clockwise until the burner locks out.

Then turn the knob anti-clockwise by about 20% of the set point and repeat burner starting to ensure it is correct.

If the burner locks out again, turn the knob anti-clockwise a little bit more.

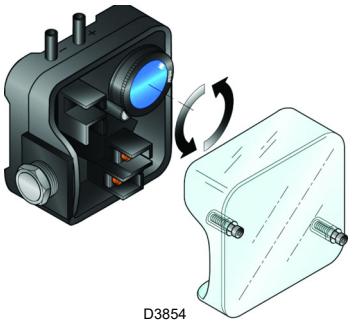

Fig. 35

WARNING

In conformity with current standards, the air pressure switch must prevent the CO in the flue gases exceeding 1% (10,000 ppm).

5.10.2 Maximum gas pressure switch

Adjust the maximum gas pressure switch after having performed all the other burner adjustments with the maximum gas pressure switch set at the end of the scale (Fig. 36).

With the burner operating at MAX output, reduce the adjustment pressure by slowly turning the adjustment knob anticlockwise until the burner locks out.

Then turn the knob clockwise by 0.2 kPa (2 mbar) and repeat the start-up of the burner.

If the burner locks out again, turn the knob again clockwise by 0.1 kPa (1 mbar).

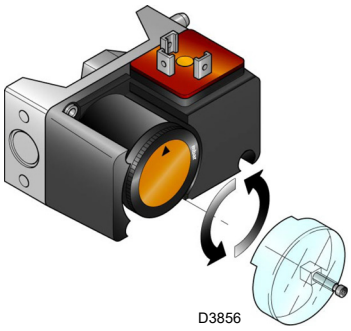

Fig. 36

5.10.3 Minimum gas pressure switch

Adjust the minimum gas pressure switch after performing all the other burner adjustments with the pressure switch set to the start of the scale (Fig. 37).

With the burner operating at maximum output, increase adjustment pressure by slowly turning the relative knob clockwise until the burner locks out.

Then turn the knob anticlockwise by 0.2 kPa (2 mbar) and repeat burner start-up to ensure its regularity. If the burner locks out again, turn the knob again clockwise by 0.1 kPa (1 mbar).

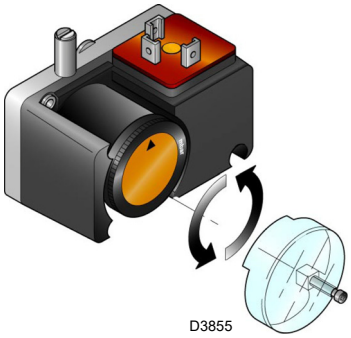

Fig. 37

WARNING

1 kPa = 10 mbar

5.10.4 Oil pressure switch

Check the calibration of the maximum and minimum oil pressure switches, using the adjustment screw as shown in Fig. 38.

The check should be carried out by individually varying the calibration of each pressure switch.

Maximum oil pressure switch

Turning the screw anti-clockwise lowers the setting and the burner should go into lockout.

Once this control has been carried out, it is necessary to reset the factory setting of the maximum oil pressure switch to about 4/5 bar.

Minimum oil pressure switch

Turning the screw clockwise increases the setting and the burner should not start.

Once this control has been carried out, it is necessary to reset the factory setting of the minimum oil pressure switch to about 16/18 bar.

Any other pressure values should be adjusted to the burner output.

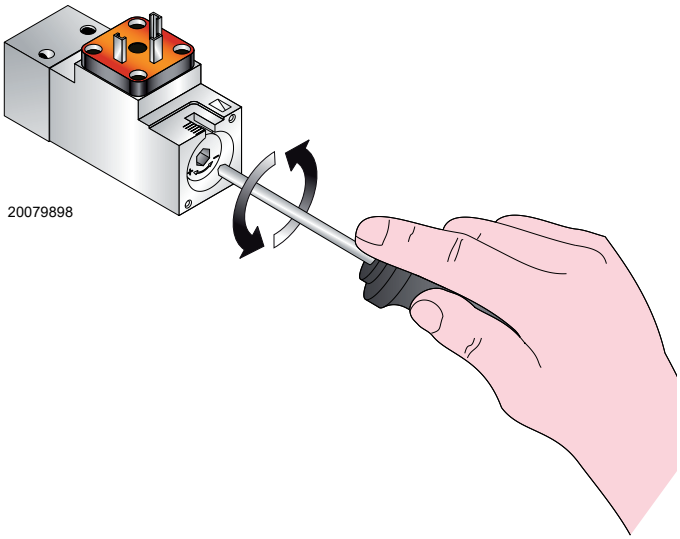

Fig. 38

5.11 Final checks (with burner operating)

➤ Open the thermostat/pressure switch TL ➤ Open the thermostat/pressure switch TS	⇨	The burner must stop
➤ Turn the gas maximum pressure switch knob to the minimum end of scale position ➤ Turn the air pressure switch to the maximum end of scale position	⇨	The burner must stop in lockout
➤ Turn off the burner and cut off the power ➤ Disconnect the minimum gas pressure switch connector	⇨	The burner must not start
➤ Obscure flame sensor	⇨	The burner must stop in lockout due to ignition failure

Tab. O

WARNING

Make sure that the mechanical locking systems on the various adjustment devices are fully tightened.

6 Maintenance

6.1 Notes on safety for the maintenance

The periodic maintenance is essential for the good operation, safety, yield and duration of the burner.

It allows you to reduce consumption and polluting emissions and to keep the product in a reliable state over time.

The maintenance interventions and the calibration of the burner must only be carried out by qualified, authorised personnel, in accordance with the contents of this manual and in compliance with the standards and regulations of current laws.

Before carrying out any maintenance, cleaning or checking operations:

Turn off the burner's power supply using the main system switch.

Turn off the fuel interception tap.

Wait for the components in contact with heat sources to cool down completely.

6.2 Maintenance programme

6.2.1 Maintenance frequency

The gas combustion system should be checked at least once a year by a representative of the manufacturer or another specialised technician.

6.2.2 Safety test - with gas ball valve closed

It is fundamental to ensure the correct execution of the electrical connections between the gas solenoid valves and the burner to perform safely the commissioning.

For this purpose, after checking that the connections have been carried out in accordance with the burner's electrical diagrams, an ignition cycle with closed gas ball valve -dry test- must be performed.

1 The manual ball gas valve must be closed
2 The electrical contacts of the burner limit switch need to be closed
3 Ensures closed the contact of the low gas pressure switch
4 Make a trial for burner ignition

The start-up cycle must be as follows:
– Starting the fan for pre-ventilation
– Performing the gas valve seal control, if provided
– Completion of pre-ventilation
– Arrival of the ignition point
– Power supply of the ignition transformer
– Electrical Supply of solenoid gas valves

Since the manual gas ball valve is closed, the burner will not light up and its control box will go to a safety lockout condition.

The actual electrical supply of the solenoid gas valves can be verified by inserting a tester. Some valves are equipped with light signals (or close/open position indicator) that turn on at the same time as their power supply.

IF THE ELECTRICAL SUPPLY OF THE GAS VALVES OCCURS AT UNEXPECTED TIMES, DO NOT OPEN MANUAL GAS BALL VALVE, SWITCH OFF POWER LINE; CHECK THE WIRES; CORRECT THE ERRORS AND REPEAT THE COMPLETE TEST.

6.2.3 Checking and cleaning

The operator must use the required equipment during maintenance.

Combustion

The optimum calibration of the burner requires an analysis of the flue gases.
Significant differences with respect to the previous measurements indicate the points where most care should be exercised during maintenance.

Combustion head

Open the burner and make sure that all components of the combustion head are in good condition, not deformed by the high temperatures, free of impurities from the surroundings and correctly positioned.

Voltage on the flame sensor

Minimum value for correct operation: 3.5 Vdc (value on AZL display at about 50%).

If the value is lower, it could be due to:
– sensor not positioned correctly
– low voltage (lower than 187 V)
– bad regulation of the burner

In order to measure, use a voltmeter with a 10 Vdc scale connected as in the diagram (Fig. 39).

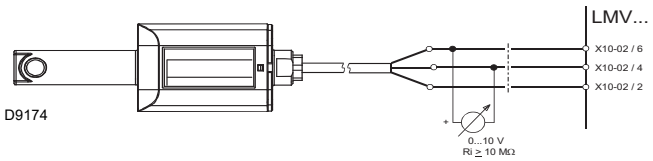

Fig. 39

Burner
Clean the outside of the burner.

Fan
Check to make sure that no dust has accumulated inside the fan or on its blades, as this condition will cause a reduction in the air flow rate and provoke polluting combustion.

Boiler
Clean the boiler as indicated in its accompanying instructions in order to maintain all the original combustion characteristics intact.

LIGHT OIL OPERATION

Filters
Check the filtering baskets on line and at nozzle present in the system.
Clean or replace if necessary.
If rust or other impurities are observed inside the pump, use a separate pump to lift any water and other impurities that may have deposited on the bottom of the tank.

Nozzles
It is advisable to replace nozzles once a year during periodical maintenance.
Do not clean the nozzle openings.

Hoses
Check that these are in good conditions.

Fuel tank
Approximately every 5 years, suck any water on the bottom of the tank using a separate pump.

Combustion
In case the combustion values found at the beginning of the intervention do not respect the standards in force or, in any case, do not correspond to a proper combustion, contact the Technical Assistance Service in order to carry out the necessary adjustments.

EN 267	Air excess		CO
	Max. output $\lambda \leq 1.2$	Min. output $\lambda \leq 1.3$	
Theoretical max CO_2 0 % O_2	CO_2 % calibration		mg/kWh
	$\lambda = 1.2$	$\lambda = 1.3$	
15.2	12.6	11.5	≤ 1000

Tab. P

GAS OPERATION

Gas leaks
Make sure that there are no gas leaks on the pipe between the gas meter and the burner.

Gas filter
Change the gas filter when it is dirty.

Combustion
In case the combustion values found at the beginning of the intervention do not respect the standards in force or, in any case, do not correspond to a proper combustion, contact the Technical Assistance Service in order to carry out the necessary adjustments.

EN 676		Air excess		CO
		Max. output $\lambda \leq 1.2$	Max. output $\lambda \leq 1.3$	
GAS	Theoretical max CO_2 0 % O_2	CO_2 % Calibration		mg/kWh
		$\lambda = 1.2$	$\lambda = 1.3$	
G 20	11.7	9.7	9	≤ 1000
G 25	11.5	9.5	8.8	≤ 1000
G 30	14.0	11.6	10.7	≤ 1000
G 31	13.7	11.4	10.5	≤ 1000

Tab. Q

6.2.4 Flame sensor disassembling

To remove the sensor 1)(Fig. 40) is necessary:
➤ electrically disconnecting it;
➤ loosen the screws 2) and turn everything to extract it from its support.

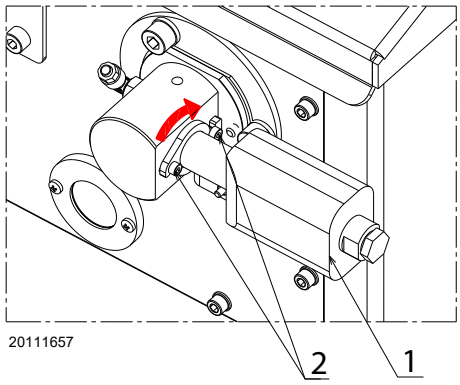

Fig. 40

6.2.5 Safety components

The safety components must be replaced at the end of their life cycle indicated in Tab. R. The specified life cycles do not refer to the warranty terms indicated in the delivery or payment conditions.

Safety component	Life cycle
Flame control	10 years or 250,000 operation cycles
Flame sensor	10 years or 250,000 operation cycles
Gas valves (solenoid)	10 years or 250,000 operation cycles
Pressure switches	10 years or 250,000 operation cycles
Pressure adjuster	15 years
Servomotor (electronic cam) (if present)	10 years or 250,000 operation cycles
Oil valve (solenoid) (if present)	10 years or 250,000 operation cycles
Oil regulator (if present)	10 years or 250,000 operation cycles
Oil pipes/ couplings (metallic) (if present)	10 years
Flexible hoses (if present)	5 years or 30,000 pressurised cycles
Fan impeller	10 years or 500,000 start-ups

Tab. R

6.2.6 Shutter replacement

Be careful about spilling fuel.

For the shutter replacement proceed as follows:

- disconnect the purging pipe 1) from the air box 2) and the flexible oil hoses 3) and 4) be careful about spilling light oil;
- remove the cover of the air box 5);
- disconnect the inner tie-rod of the shutter 6);
- disconnect the lance 8);
- disconnect the pipe connecting to the pilot train;
- remove the screws 9) and open the air box 2) on the hinge;
- remove the head and the pilot as described in the section "**Access to head internal part**" on page 20;
- remove the screws 10) and the pins 11) for adjusting the slide bars 12) of the shutter 13) and the slide bars themselves;
- remove the shutter;
- remove the pins with bearing 14) fitted on the shutter by remove the shutter; loosening the nuts 7).
  If they are in a good condition, put them back on the new shutter, otherwise replace them (see the spare parts list for the right code).
- Put back everything in the reverse order; centre the shutter with respect to the flame funnel, using the adjustment pins and screws 10) and 11);
- check the shutter is sliding correctly after suitable greasing the bearings and the articulated couplings of the tie-rod of the shutter itself;
- put back the head and pilot;
- connect the sliding tie-rod of the shutter to the inner lever;
- close the cover and the air conveyor;
- refit the rest of the components working in the reverse order.

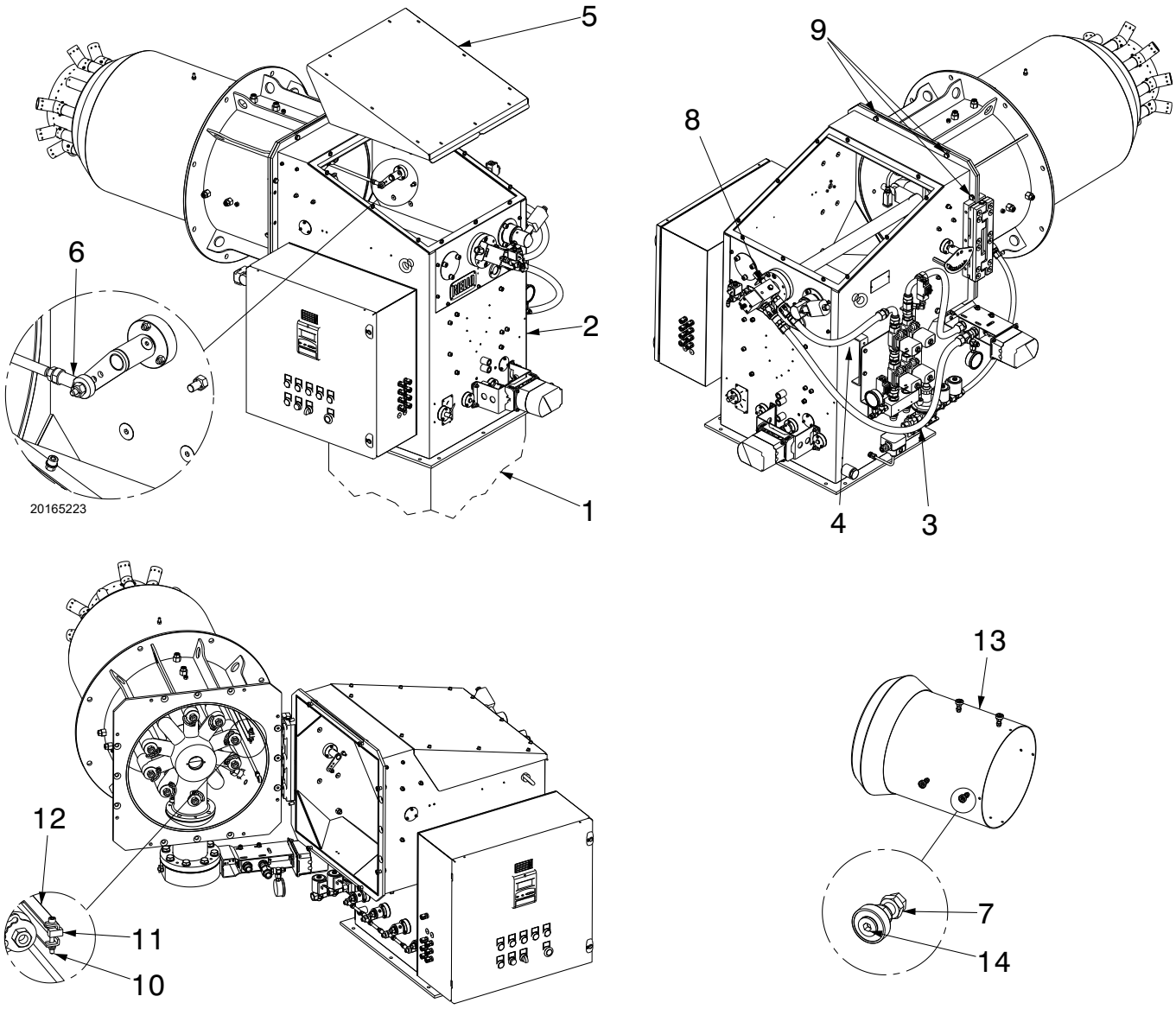

Fig. 41

6.3 Opening the burner

DANGER

Turn off the burner's power supply using the main system switch.

DANGER

Turn off the fuel interception tap.

Wait for the components in contact with heat sources to cool down completely.

In order to reach inside the combustion head refer to paragraph “**Access to head internal part**” on page 20.

6.4 Closing the burner

Refit following the steps described but in reverse order; refit all burner components as they were originally assembled.

After carrying out maintenance, cleaning or checking operations, reassemble the cover and all the safety and protection devices of the burner.

7 Faults - Possible causes - Solutions

If faults arise in ignition or operations, the burner performs a "safety stop", which is signalled by the red burner lockout LED.

The display visualises alternately the lockout code and the relative diagnostic. To reset the start-up conditions, refer to the “Reset procedure” indicated in the control box manual supplied.

When the burner starts again, the red LED goes out and the control box is reset.

In the event the burner stops, in order to prevent any damage to the installation, do not unblock the burner more than twice in a row. If the burner locks out for a third time, contact the customer service.

In the event there are further lockouts or faults with the burner, the maintenance interventions must only be carried out by qualified, authorised personnel, in accordance with the contents of this manual and in compliance with the standards and regulations of current laws.

7.1 Oil operation

Problem	Possible cause	Recommended remedy
The burner does not start	No electrical power supply	Close all switches - Check connections
	A limiter or safety control device is open	Adjust or replace
	Flame control lockout	Release
	Control box fuse broken	Replace it
	Incorrect electrical wiring	Check connections
	Defective flame control	Replace it
	Air pressure switch in operating position	Adjust or replace
The burner does not switch on and the lockout appears	Flame simulation	Replace the control box
The burner starts and then goes into lockout	Air pressure switch does not switch owing to lack of air pressure:	
	Air pressure switch is badly adjusted	Adjust it or replace it
	Pressure switch pressure test point pipe blocked	Clean
	Head wrongly adjusted	Adjust
The burner turns on and then remains in lockout mode	Defective flame detection circuit	Replace control box
Once the pre-purging and the safety time has elapsed, the burner goes into lockout without the flame appearing	The VR solenoid lets too little gas through	Increase it
	The VR or VS solenoid valve does not open	Replace the coil or the rectifier panel
	The burner's pilot is not functioning	Check
	Ignition transformer defective	Replace it
	Incorrect valve or firing transformer connections	Redo them
	Defective control box	Replace
	Air in pipework	Bleed air
Locks out with flame	Defective control box	Replace
Burner goes into lockout during operation	Fault on air pressure switch	Replace
Lockout when the burner stops	Permanence of the flame in the head of combustion simulation of flame	Eliminate the continuation of the flame or replace control box
Firing with pulses	Head badly adjusted	Adjust it properly
	Fan air damper badly adjusted	Adjust it
	Firing output too high	Reduce it

Tab. S

7.2 Gas operation

Problem	Possible cause	Recommended remedy
The burner does not start	No electrical power supply	Close all switches - Check connections
	A limiter or safety control device is open	Adjust or replace
	Flame control lockout	Release
	Control box fuse broken	Replace it
	Incorrect electrical wiring	Check connections
	Defective flame control	Replace it
	No gas supply	Open the manual valves between meter and train
	Mains gas pressure insufficient	Contact your gas company
	Minimum gas pressure switch fails to close	Adjust or replace
	Air pressure switch in operating position	Adjust or replace
The burner does not switch on and the lockout appears	Flame simulation	Replace the control box
The burner starts and then goes into lock-out	Air pressure switch does not switch owing to lack of air pressure:	
	Air pressure switch is badly adjusted	Adjust it or replace it
	Pressure switch pressure test point pipe blocked	Clean
	Head wrongly adjusted	Adjust
The burner turns on and then remains in lockout mode	Defective flame detection circuit	Replace control box
Once the pre-purging and the safety time has elapsed, the burner goes into lockout without the flame appearing	The VR solenoid lets too little gas through	Increase it
	The VR or VS solenoid valve does not open	Replace the coil or the rectifier panel
	Gas pressure too low	Increase pressure at regulator
	The burner's pilot is not functioning	Check
	Ignition transformer defective	Replace it
	Incorrect valve or firing transformer connections	Redo them
	Defective control box	Replace
	A closed valve up-line from the gas train	Open it
	Air in pipework	Bleed air
Locks out with flame	The VR solenoid lets too little gas through	Increase it
	Maximum gas pressure switch intervention	Adjust or replace
	Defective control box	Replace
The burner continues to repeat the start-up cycle, without lockout	The gas pressure in the network is near the value on which the min. gas pressure switch is adjusted. The sudden fall in pressure that follows the opening of the valve causes the temporary opening of the pressure switch itself immediately the valve closes and the burner stops. The pressure starts to increase again, the pressure switch closes and repeats the start up cycle. The sequence repeats endlessly.	Reduce the operating pressure of the the min. gas pressure switch. Replace the gas filter cartridge.
Burner goes into lockout during operation	Fault on air pressure switch	Replace
	Maximum gas pressure switch intervention	Adjust or replace
Lockout when the burner stops	Permanence of the flame in the head of combustion simulation of flame	Eliminate the continuation of the flame or replace control box
Firing with pulses	Head badly adjusted	Adjust it properly
	Fan air damper badly adjusted	Adjust it
	Firing output too high	Reduce it

Tab. T

A Appendix - Electrical panel layout

1	**Index of layouts**
2	Indication of references
3	Operational layout
4	Operational layout
5	Operational layout
6	Operational layout
7	Operational layout
8	Operational layout
9	Operational layout
10	Operational layout
11	Operational layout
12	Electrical connections set by installer
13	Electrical connections set by installer

2 Indication of references

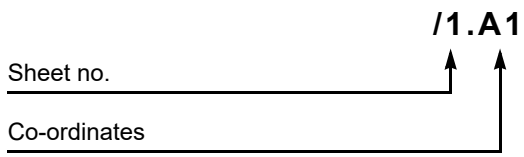

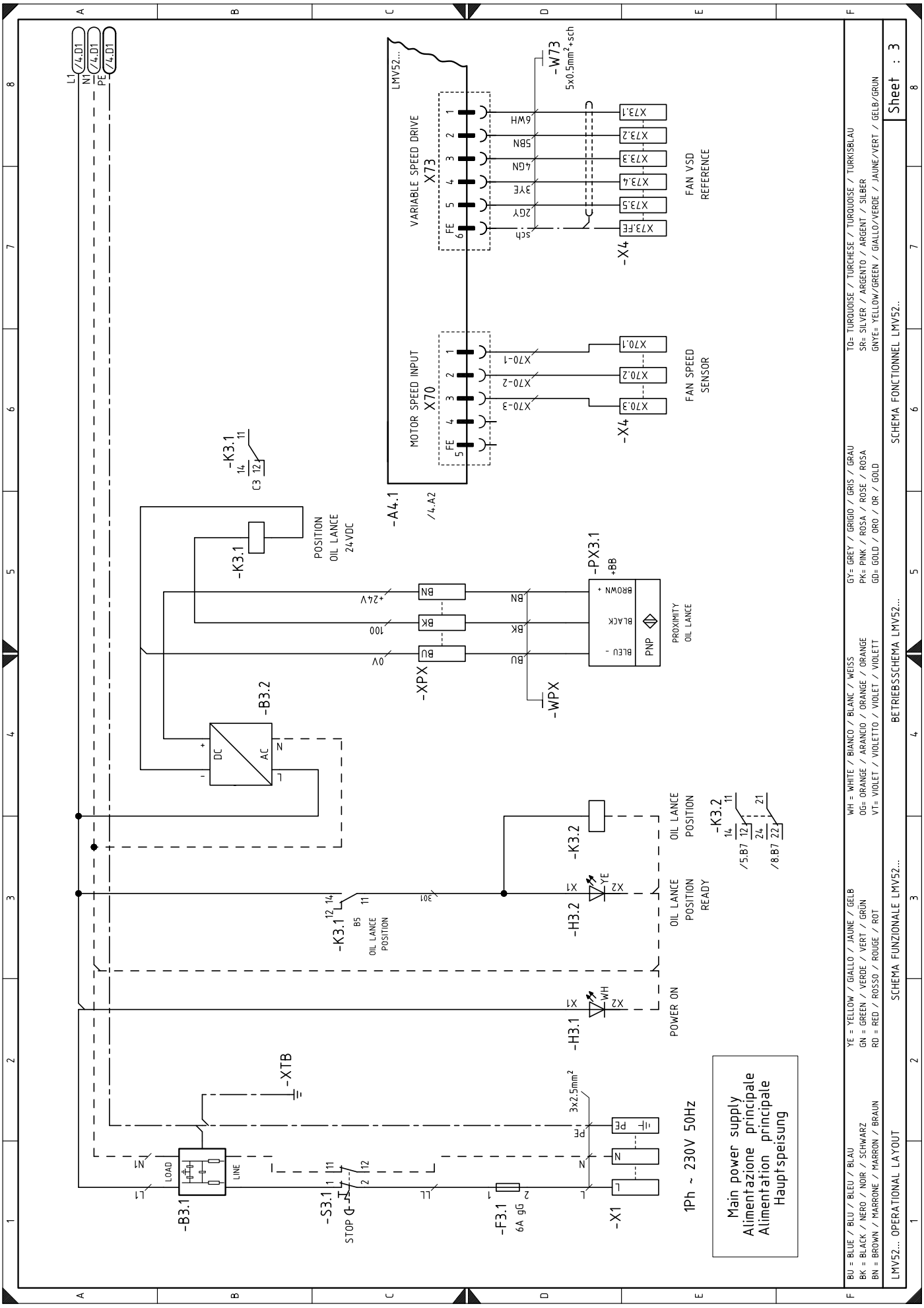
L1
N1
PE
/4.D1
LMV52...
VARIABLE SPEED DRIVE
X73
-W73
5x0.5mm²+sch
FAN VSD REFERENCE
-X4
MOTOR SPEED INPUT
X70
FAN SPEED SENSOR
-A4.1
/4.A2
-K3.1
POSITION OIL LANCE 24VDC
-PX3.1
+BB
PROXIMITY OIL LANCE
PNP
-XPX
-WPX
-B3.2
DC
AC
-K3.2
OIL LANCE POSITION
-H3.2
OIL LANCE POSITION READY
-H3.1
POWER ON
-K3.2
/5.B7
/8.B7
-XTB
-B3.1
LOAD
LINE
-S3.1
STOP
-F3.1
6A gG
-X1
1Ph ~ 230V 50Hz
3x2.5mm²
Main power supply
Alimentazione principale
Alimentation principale
Hauptspeisung
BU = BLUE / BLU / BLEU / BLAU
BK = BLACK / NERO / NOIR / SCHWARZ
BN = BROWN / MARRONE / MARRON / BRAUN
YE = YELLOW / GIALLO / JAUNE / GELB
GN = GREEN / VERDE / VERT / GRÜN
RD = RED / ROSSO / ROUGE / ROT
WH = WHITE / BIANCO / BLANC / WEISS
OG= ORANGE / ARANCIO / ORANGE / ORANGE
VT= VIOLET / VIOLETTO / VIOLET / VIOLETT
GY= GREY / GRIGIO / GRIS / GRAU
PK= PINK / ROSA / ROSE / ROSA
GD= GOLD / ORO / OR / GOLD
TQ= TURQUOISE / TURCHESE / TURQUOISE / TÜRKISBLAU
SR= SILVER / ARGENTO / ARGENT / SILBER
GNYE= YELLOW/GREEN / GIALLO/VERDE / JAUNE/VERT / GELB/GRÜN
LMV52... OPERATIONAL LAYOUT
SCHEMA FUNZIONALE LMV52...
BETRIEBSSCHEMA LMV52...
SCHEMA FONCTIONNEL LMV52...
Sheet : 3

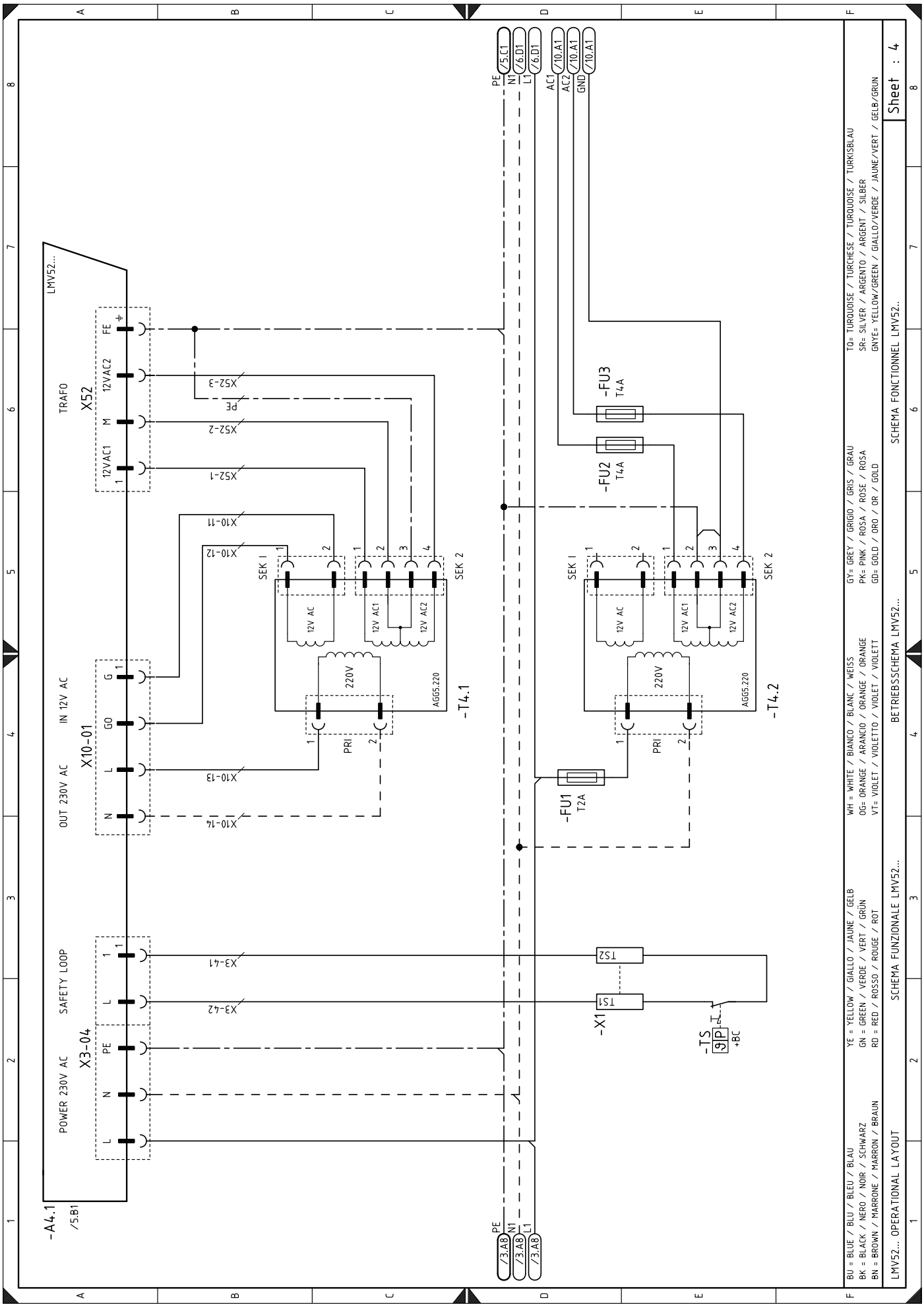
LMV52...
TRAFO
X52
12VAC1
12VAC2
FE
M
X52-3
X52-2
X52-1
PE
X10-11
X10-12
SEK I
SEK 2
12V AC
12V AC1
12V AC2
220V
PRI
AGG5.220
-T4.1
-T4.2
OUT 230V AC
IN 12V AC
X10-01
G
GO
L
N
X10-13
X10-14
SAFETY LOOP
X3-04
X3-41
X3-42
POWER 230V AC
-A4.1
/5.B1
PE
N1
L1
/3.A8
/5.C1
/6.D1
AC1
AC2
GND
/10.A1
-FU3
T4A
-FU2
T4A
-FU1
T2A
TS2
TS1
-X1
-TS
+BC
BU = BLUE / BLU / BLEU / BLAU
BK = BLACK / NERO / NOIR / SCHWARZ
BN = BROWN / MARRONE / MARRON / BRAUN
YE = YELLOW / GIALLO / JAUNE / GELB
GN = GREEN / VERDE / VERT / GRÜN
RD = RED / ROSSO / ROUGE / ROT
WH = WHITE / BIANCO / BLANC / WEISS
OG= ORANGE / ARANCIO / ORANGE / ORANGE
VT= VIOLET / VIOLETTO / VIOLET / VIOLETT
GY= GREY / GRIGIO / GRIS / GRAU
PK= PINK / ROSA / ROSE / ROSA
GD= GOLD / ORO / OR / GOLD
TQ= TURQUOISE / TURCHESE / TURQUOISE / TURKISBLAU
SR= SILVER / ARGENTO / ARGENT / SILBER
GNYE= YELLOW/GREEN / GIALLO/VERDE / JAUNE/VERT / GELB/GRUN
LMV52... OPERATIONAL LAYOUT
SCHEMA FUNZIONALE LMV52...
BETRIEBSSCHEMA LMV52...
SCHEMA FONCTIONNEL LMV52...
Sheet : 4

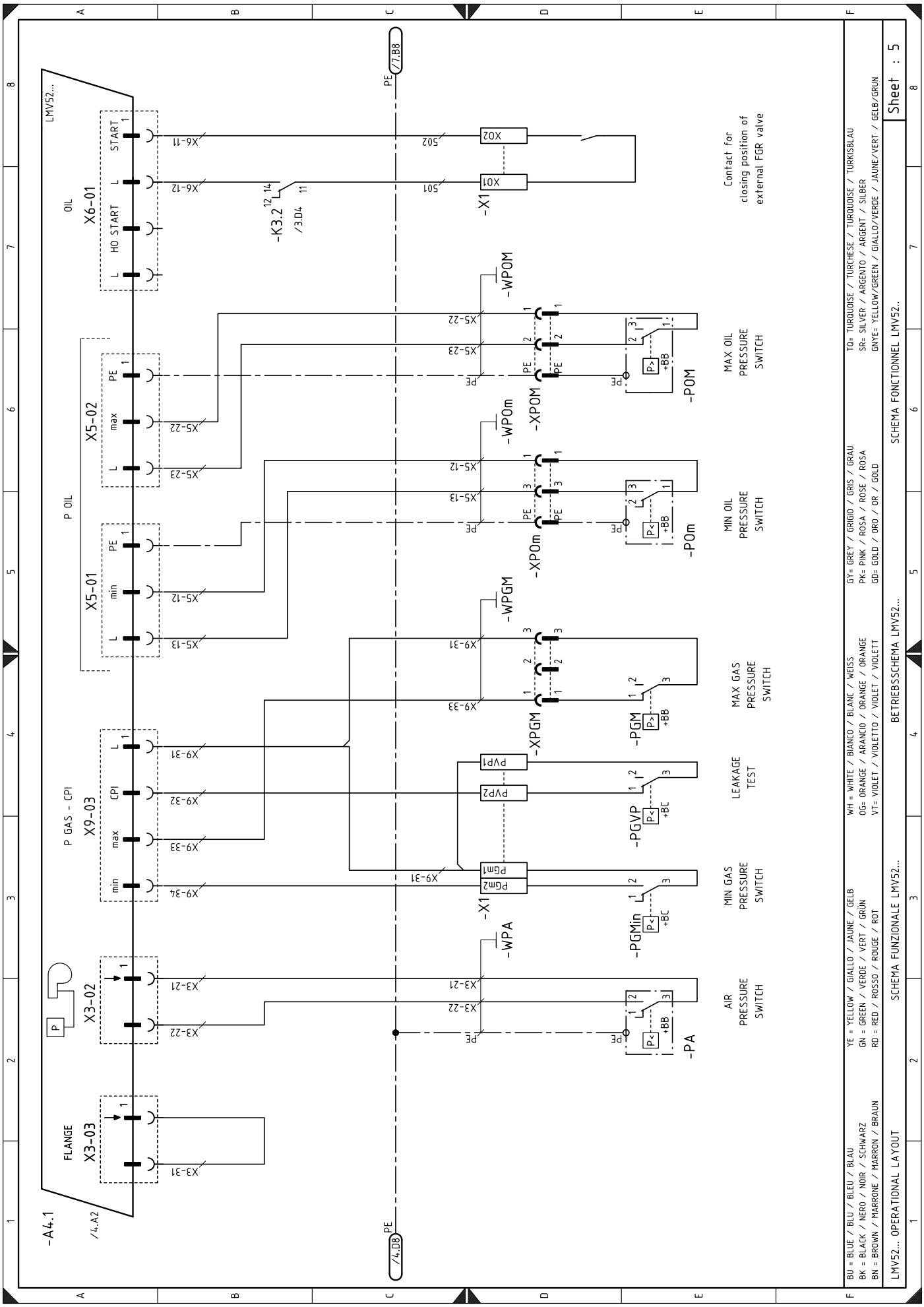
LMV52...
OIL
X6-01
HO START
START
P OIL
X5-02
X5-01
P GAS - CPI
X9-03
X3-02
FLANGE
X3-03
-A4.1
/4.A2
-K3.2
/3.D4
-X1
XO1
XO2
-WPOM
-XPOM
-POM
-WPOm
-XPOm
-POm
-WPGM
-XPGM
-PGM
-PGVP
-PGMin
-WPA
-PA
Contact for closing position of external FGR valve
MAX OIL PRESSURE SWITCH
MIN OIL PRESSURE SWITCH
MAX GAS PRESSURE SWITCH
LEAKAGE TEST
MIN GAS PRESSURE SWITCH
AIR PRESSURE SWITCH
BU = BLUE / BLU / BLEU / BLAU
BK = BLACK / NERO / NOIR / SCHWARZ
BN = BROWN / MARRONE / MARRON / BRAUN
YE = YELLOW / GIALLO / JAUNE / GELB
GN = GREEN / VERDE / VERT / GRÜN
RD = RED / ROSSO / ROUGE / ROT
WH = WHITE / BIANCO / BLANC / WEISS
OG= ORANGE / ARANCIO / ORANGE / ORANGE
VT= VIOLET / VIOLETTO / VIOLET / VIOLETT
GY= GREY / GRIGIO / GRIS / GRAU
PK= PINK / ROSA / ROSE / ROSA
GD= GOLD / ORO / OR / GOLD
TQ= TURQUOISE / TURCHESE / TURQUOISE / TURKISBLAU
SR= SILVER / ARGENTO / ARGENT / SILBER
GNYE= YELLOW/GREEN / GIALLO/VERDE / JAUNE/VERT / GELB/GRUN
LMV52... OPERATIONAL LAYOUT
SCHEMA FUNZIONALE LMV52...
BETRIEBSSCHEMA LMV52...
SCHEMA FONCTIONNEL LMV52..
Sheet : 5

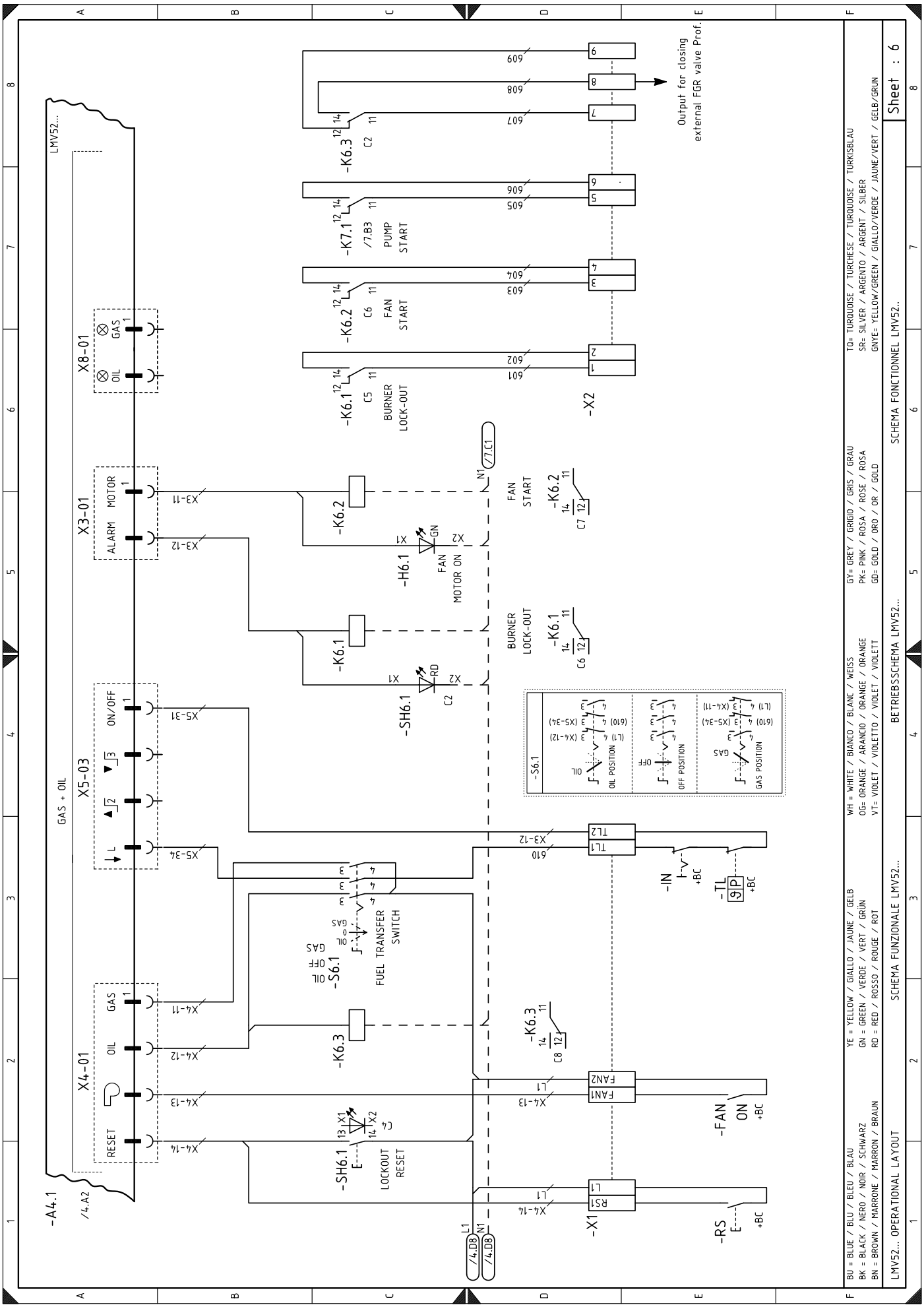
LMV52...
GAS + OIL
X4-01
X5-03
X3-01
X8-01
RESET
OIL
GAS
ON/OFF
ALARM
MOTOR
-A4.1
/4.A2
-K6.1
-K6.2
-K6.3
-K7.1
/7.B3
PUMP START
-K6.1
C5
BURNER LOCK-OUT
-K6.2
C6
FAN START
-K6.3
C2
-X2
Output for closing external FGR valve Prof.
-H6.1
FAN MOTOR ON
-SH6.1
BURNER LOCK-OUT
-K6.1
C6
-K6.2
C7
FAN START
-S6.1
OIL POSITION
OFF POSITION
GAS POSITION
-S6.1
FUEL TRANSFER SWITCH
-SH6.1
LOCKOUT RESET
-K6.3
C8
-X1
-FAN
ON
+BC
-RS
+BC
-IN
+BC
-TL
+BC
BU = BLUE / BLU / BLEU / BLAU
BK = BLACK / NERO / NOIR / SCHWARZ
BN = BROWN / MARRONE / MARRON / BRAUN
YE = YELLOW / GIALLO / JAUNE / GELB
GN = GREEN / VERDE / VERT / GRÜN
RD = RED / ROSSO / ROUGE / ROT
WH = WHITE / BIANCO / BLANC / WEISS
OG= ORANGE / ARANCIO / ORANGE / ORANGE
VT= VIOLET / VIOLETTO / VIOLET / VIOLETT
GY= GREY / GRIGIO / GRIS / GRAU
PK= PINK / ROSA / ROSE / ROSA
GD= GOLD / ORO / OR / GOLD
TQ= TURQUOISE / TURCHESE / TURQUOISE / TURKISBLAU
SR= SILVER / ARGENTO / ARGENT / SILBER
GNYE= YELLOW/GREEN / GIALLO/VERDE / JAUNE/VERT / GELB/GRUN
LMV52... OPERATIONAL LAYOUT
SCHEMA FUNZIONALE LMV52...
BETRIEBSSCHEMA LMV52...
SCHEMA FONCTIONNEL LMV52..
Sheet : 6

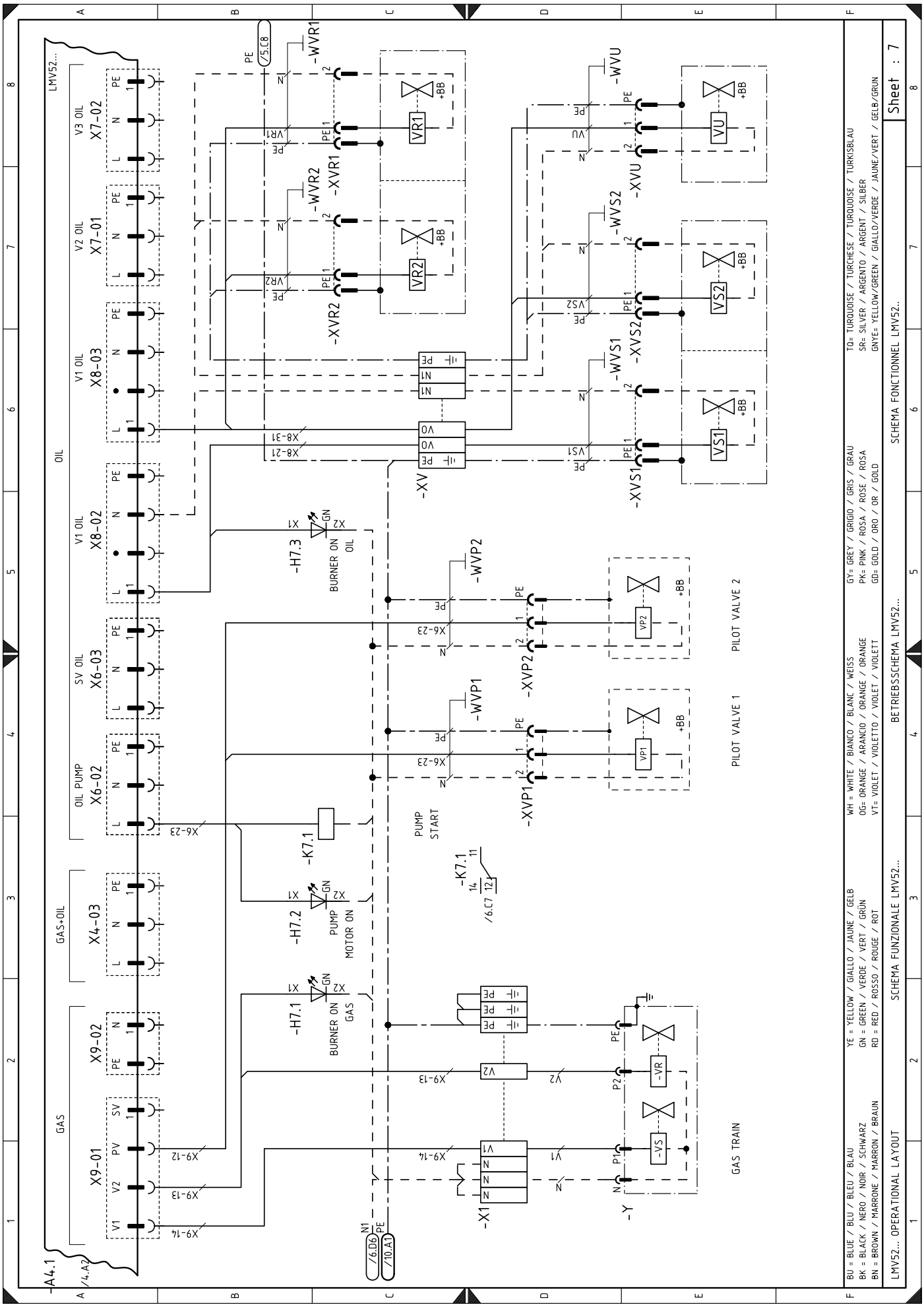
LMV52...
OIL
GAS
GAS+OIL
V1 OIL
V2 OIL
V3 OIL
SV OIL
OIL PUMP
X8-02
X8-03
X7-01
X7-02
X6-03
X6-02
X4-03
X9-02
X9-01
-A4.1
-H7.3
BURNER ON OIL
-H7.2
PUMP MOTOR ON
-H7.1
BURNER ON GAS
-K7.1
PUMP START
-WVR1
-WVR2
-WVS1
-WVS2
-WVU
-WVP1
-WVP2
-XV
-XVR1
-XVR2
-XVS1
-XVS2
-XVU
-XVP1
-XVP2
VR1
VR2
VS1
VS2
VU
VP1
VP2
+BB
PILOT VALVE 1
PILOT VALVE 2
GAS TRAIN
-X1
-Y
-VR
-VS
BU = BLUE / BLU / BLEU / BLAU
BK = BLACK / NERO / NOIR / SCHWARZ
BN = BROWN / MARRONE / MARRON / BRAUN
YE = YELLOW / GIALLO / JAUNE / GELB
GN = GREEN / VERDE / VERT / GRÜN
RD = RED / ROSSO / ROUGE / ROT
WH = WHITE / BIANCO / BLANC / WEISS
OG= ORANGE / ARANCIO / ORANGE / ORANGE
VT= VIOLET / VIOLETTO / VIOLET / VIOLETT
GY= GREY / GRIGIO / GRIS / GRAU
PK= PINK / ROSA / ROSE / ROSA
GD= GOLD / ORO / OR / GOLD
TQ= TURQUOISE / TURCHESE / TURQUOISE / TURKISBLAU
SR= SILVER / ARGENTO / ARGENT / SILBER
GNYE= YELLOW/GREEN / GIALLO/VERDE / JAUNE/VERT / GELB/GRUN
LMV52... OPERATIONAL LAYOUT
SCHEMA FUNZIONALE LMV52...
BETRIEBSSCHEMA LMV52...
SCHEMA FONCTIONNEL LMV52..
Sheet : 7

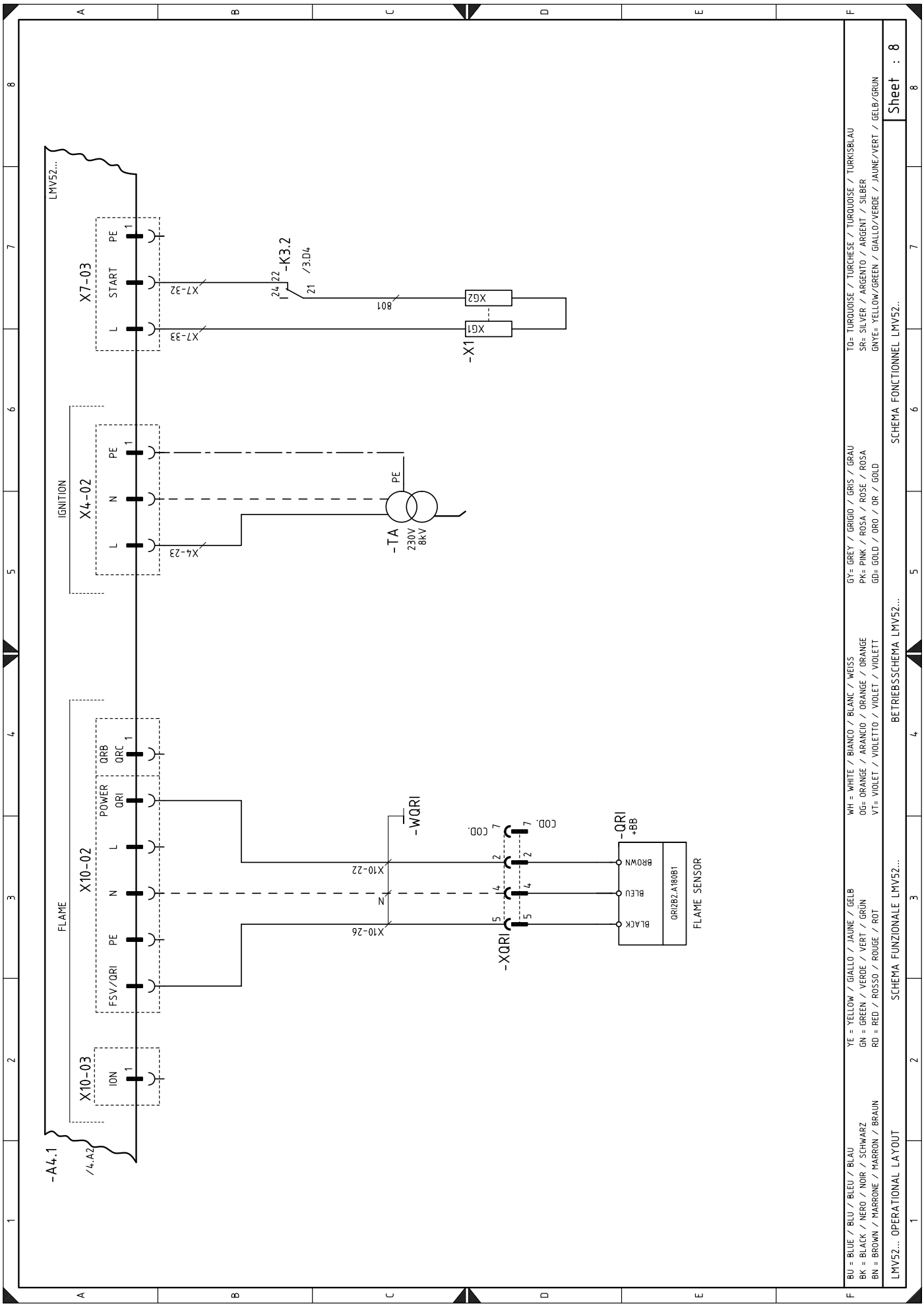
LMV52...
X7-03
START
PE
L
X7-32
X7-33
-K3.2
/3.D4
24
22
21
801
XG2
XG1
-X1
IGNITION
X4-02
PE
N
L
X4-23
-TA
230V
8kV
FLAME
X10-02
POWER
QRB
QRC
QRI
FSV/QRI
X10-22
X10-26
N
-WQRI
COD.
-XQRI
-QRI
+BB
BROWN
BLEU
BLACK
QRI2B2.A180B1
FLAME SENSOR
X10-03
ION
-A4.1
/4.A2
BU = BLUE / BLU / BLEU / BLAU
BK = BLACK / NERO / NOIR / SCHWARZ
BN = BROWN / MARRONE / MARRON / BRAUN
YE = YELLOW / GIALLO / JAUNE / GELB
GN = GREEN / VERDE / VERT / GRÜN
RD = RED / ROSSO / ROUGE / ROT
WH = WHITE / BIANCO / BLANC / WEISS
OG= ORANGE / ARANCIO / ORANGE / ORANGE
VT= VIOLET / VIOLETTO / VIOLET / VIOLETT
GY= GREY / GRIGIO / GRIS / GRAU
PK= PINK / ROSA / ROSE / ROSA
GD= GOLD / ORO / OR / GOLD
TQ= TURQUOISE / TURCHESE / TURQUOISE / TURKISBLAU
SR= SILVER / ARGENTO / ARGENT / SILBER
GNYE= YELLOW/GREEN / GIALLO/VERDE / JAUNE/VERT / GELB/GRUN
LMV52.. OPERATIONAL LAYOUT
SCHEMA FUNZIONALE LMV52...
BETRIEBSSCHEMA LMV52...
SCHEMA FONCTIONNEL LMV52..
Sheet : 8

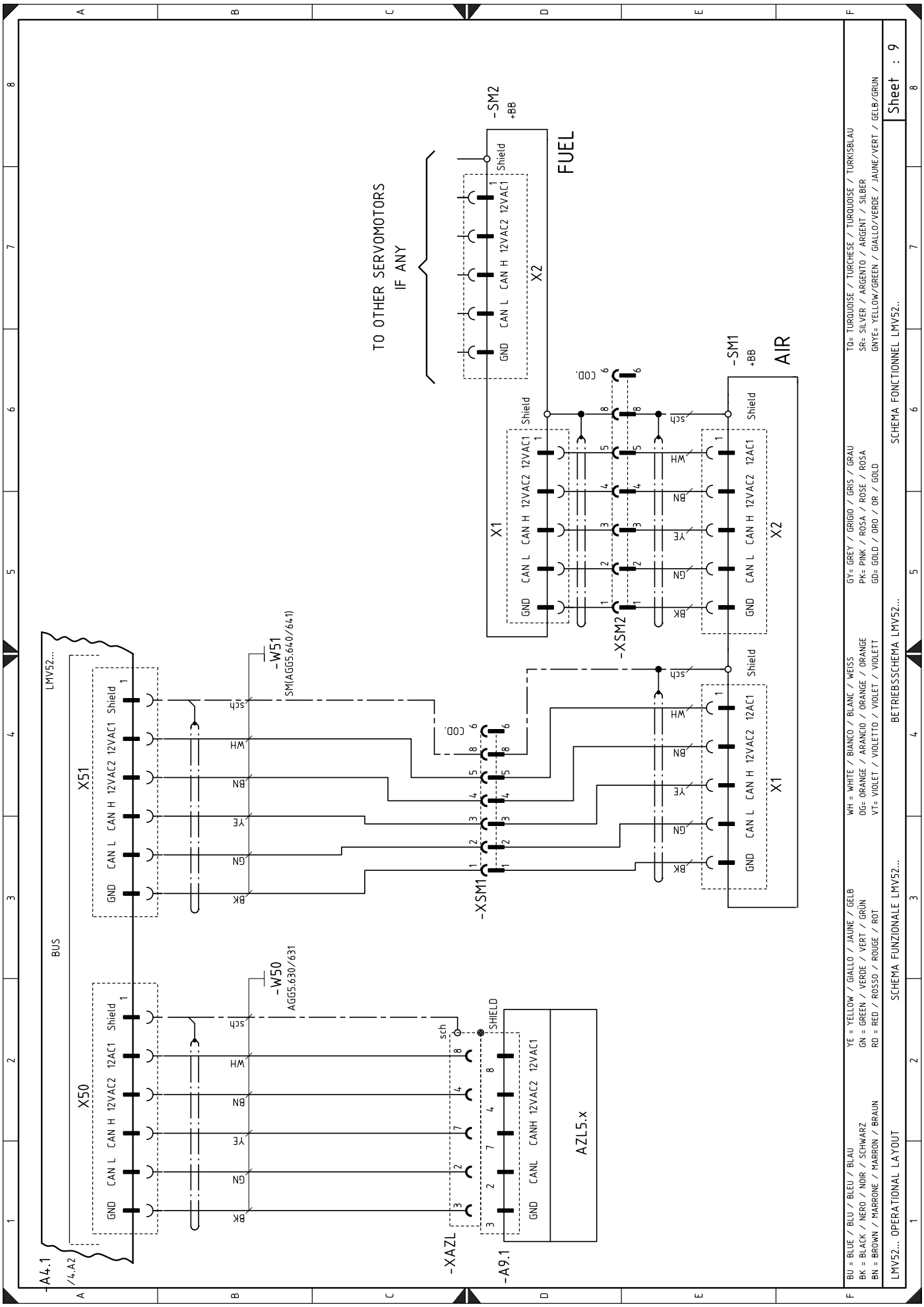
TO OTHER SERVOMOTORS
IF ANY
-SM2
+BB
FUEL
-SM1
+BB
AIR
X1
X2
-XSM1
-XSM2
-W51
SM(AGG5.640/641)
-W50
AGG5.630/631
-XAZL
-A9.1
-A4.1
/4.A2
LMV52...
BUS
X50
X51
AZL5.x
SHIELD
GND CAN L CAN H 12VAC2 12VAC1 Shield
GND CANL CANH 12VAC2 12VAC1
BU = BLUE / BLU / BLEU / BLAU
BK = BLACK / NERO / NOIR / SCHWARZ
BN = BROWN / MARRONE / MARRON / BRAUN
YE = YELLOW / GIALLO / JAUNE / GELB
GN = GREEN / VERDE / VERT / GRÜN
RD = RED / ROSSO / ROUGE / ROT
WH = WHITE / BIANCO / BLANC / WEISS
OG= ORANGE / ARANCIO / ORANGE / ORANGE
VT= VIOLET / VIOLETTO / VIOLET / VIOLETT
GY= GREY / GRIGIO / GRIS / GRAU
PK= PINK / ROSA / ROSE / ROSA
GD= GOLD / ORO / OR / GOLD
TQ= TURQUOISE / TURCHESE / TURQUOISE / TURKISBLAU
SR= SILVER / ARGENTO / ARGENT / SILBER
GNYE= YELLOW/GREEN / GIALLO/VERDE / JAUNE/VERT / GELB/GRUN
LMV52.. OPERATIONAL LAYOUT
SCHEMA FUNZIONALE LMV52...
BETRIEBSSCHEMA LMV52...
SCHEMA FONCTIONNEL LMV52..
Sheet : 9

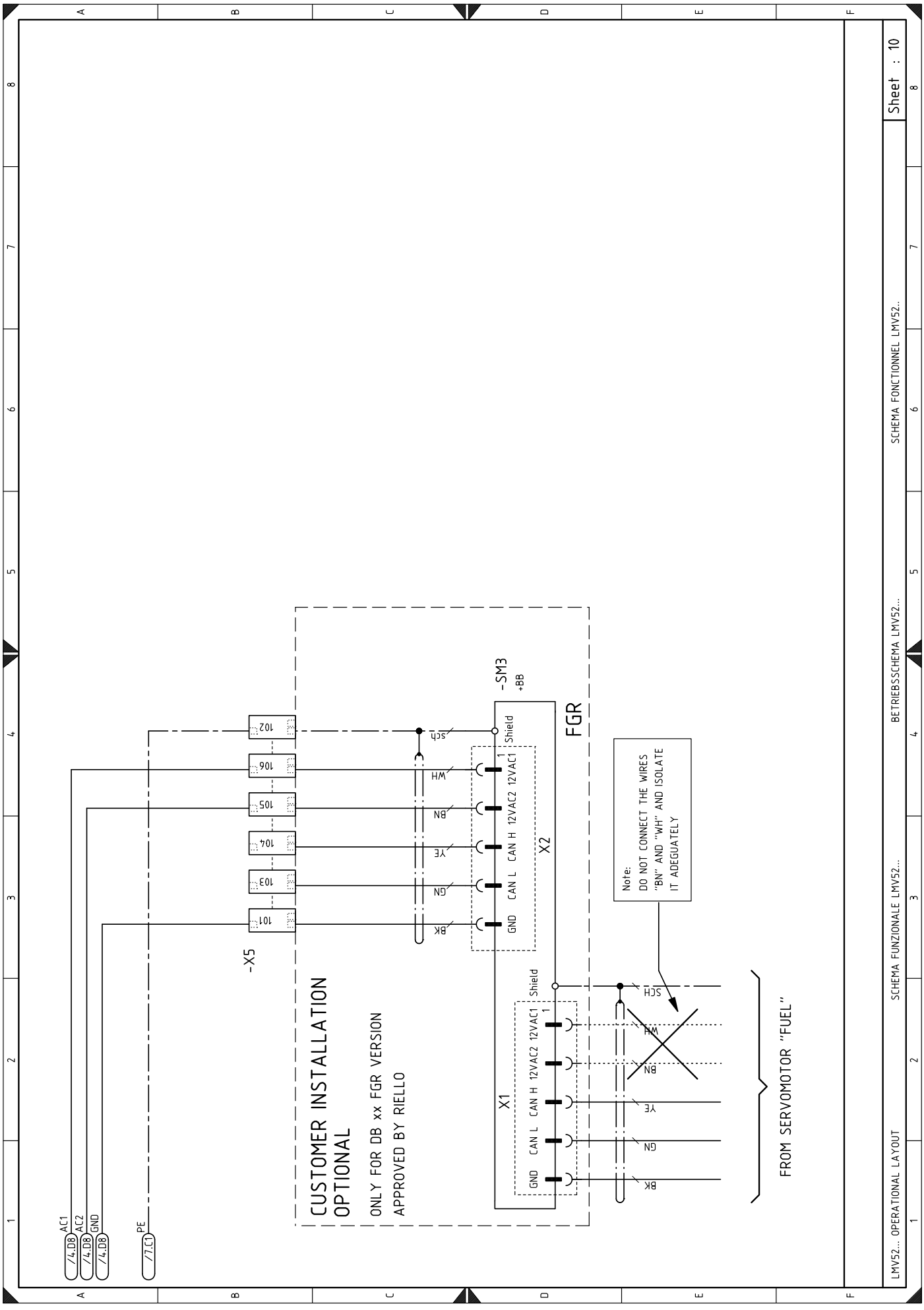
LMV52... OPERATIONAL LAYOUT
SCHEMA FUNZIONALE LMV52...
BETRIEBSSCHEMA LMV52...
SCHEMA FONCTIONNEL LMV52..
Sheet : 10
AC1
AC2
GND
PE
/4.D8
/4.D8
/4.D8
/7.C1
-X5
102
106
105
104
103
101
sch
WH
BN
YE
GN
BK
-SM3
+BB
Shield
1
12VAC1
12VAC2
CAN H
CAN L
GND
X2
X1
FGR
CUSTOMER INSTALLATION
OPTIONAL
ONLY FOR DB xx FGR VERSION
APPROVED BY RIELLO
Note:
DO NOT CONNECT THE WIRES
"BN" AND "WH" AND ISOLATE
IT ADEGUATELY
FROM SERVOMOTOR "FUEL"

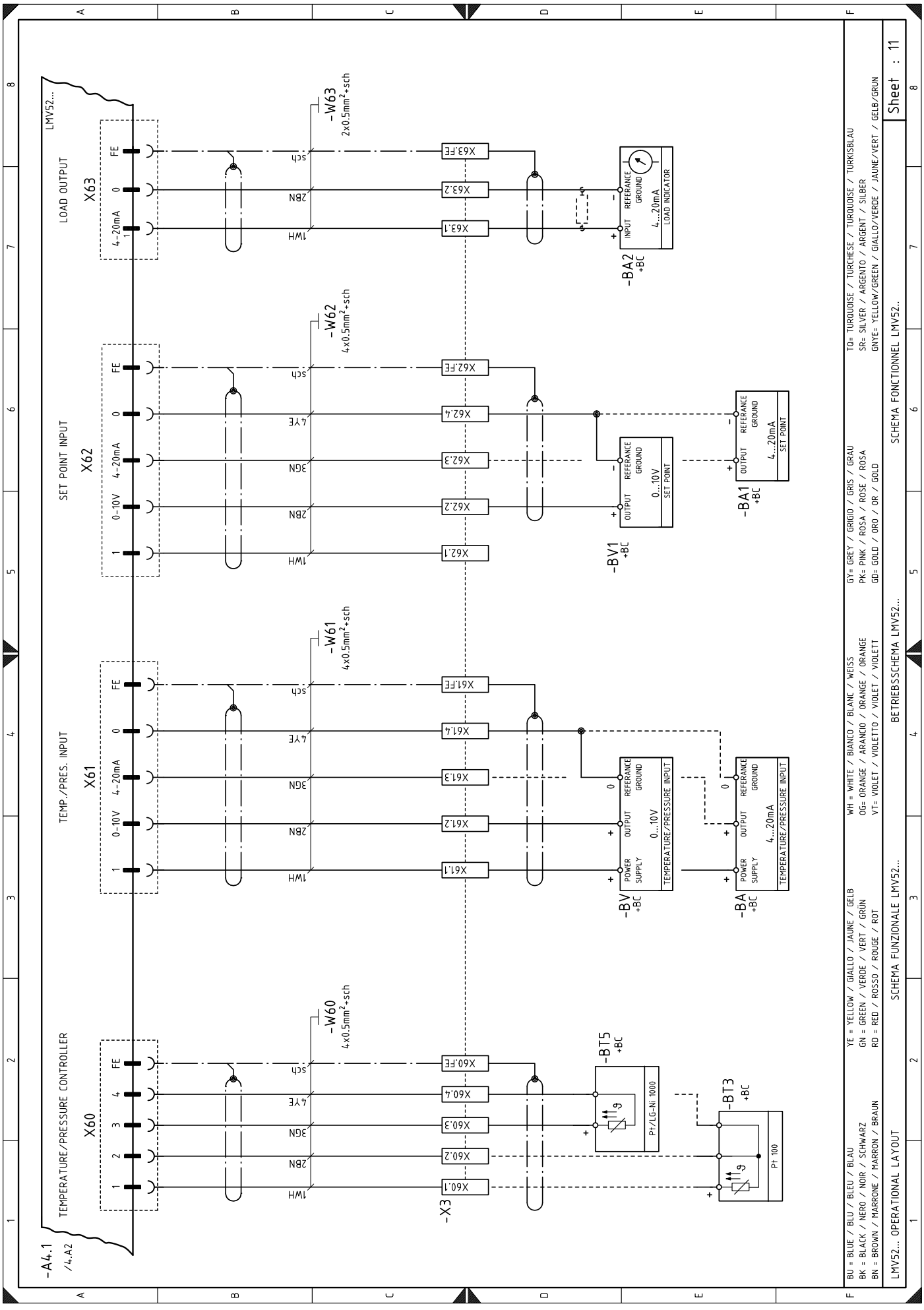
LMV52...
LOAD OUTPUT
X63
FE
0
4-20mA
1
-W63
2x0.5mm²+sch
X63.FE
X63.2
X63.1
sch
2BN
1WH
-BA2
+BC
INPUT
REFERANCE
GROUND
4...20mA
LOAD INDICATOR
SET POINT INPUT
X62
0-10V
-W62
4x0.5mm²+sch
X62.FE
X62.4
X62.3
X62.2
X62.1
4YE
3GN
-BV1
0...10V
SET POINT
-BA1
OUTPUT
TEMP./PRES. INPUT
X61
-W61
4x0.5mm²+sch
X61.FE
X61.4
X61.3
X61.2
X61.1
-BV
POWER SUPPLY
TEMPERATURE/PRESSURE INPUT
-BA
TEMPERATURE/PRESSURE CONTROLLER
X60
-W60
4x0.5mm²+sch
X60.FE
X60.4
X60.3
X60.2
X60.1
-BT5
Pt/LG-Ni 1000
-BT3
Pt 100
-X3
-A4.1
/4.A2
BU = BLUE / BLEU / BLAU
BK = BLACK / NERO / NOIR / SCHWARZ
BN = BROWN / MARRONE / MARRON / BRAUN
YE = YELLOW / GIALLO / JAUNE / GELB
GN = GREEN / VERDE / VERT / GRÜN
RD = RED / ROSSO / ROUGE / ROT
WH = WHITE / BIANCO / BLANC / WEISS
OG= ORANGE / ARANCIO / ORANGE / ORANGE
VT= VIOLET / VIOLETTO / VIOLET / VIOLETT
GY= GREY / GRIGIO / GRIS / GRAU
PK= PINK / ROSA / ROSE / ROSA
GD= GOLD / ORO / OR / GOLD
TQ= TURQUOISE / TURCHESE / TURQUOISE / TÜRKISBLAU
SR= SILVER / ARGENTO / ARGENT / SILBER
GNYE= YELLOW/GREEN / GIALLO/VERDE / JAUNE/VERT / GELB/GRÜN
LMV52... OPERATIONAL LAYOUT
SCHEMA FUNZIONALE LMV52...
BETRIEBSSCHEMA LMV52...
SCHEMA FONCTIONNEL LMV52..
Sheet : 11

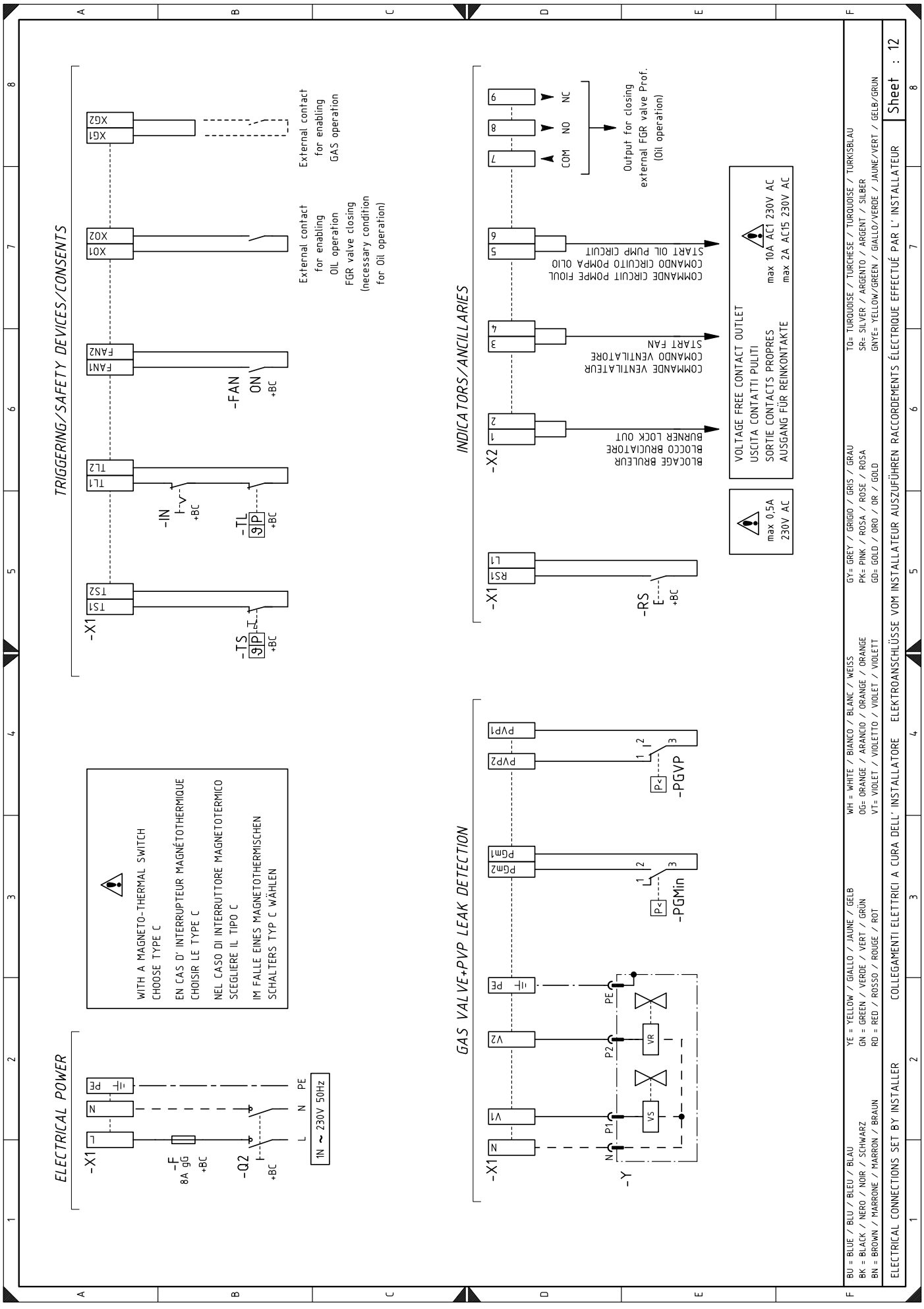
ELECTRICAL POWER
TRIGGERING/SAFETY DEVICES/CONSENTS
INDICATORS/ANCILLARIES
GAS VALVE+PVP LEAK DETECTION
WITH A MAGNETO-THERMAL SWITCH
CHOOSE TYPE C
EN CAS D' INTERRUPTEUR MAGNÉTOTHERMIQUE
CHOISIR LE TYPE C
NEL CASO DI INTERRUTTORE MAGNETOTERMICO
SCEGLIERE IL TIPO C
IM FALLE EINES MAGNETOTHERMISCHEN
SCHALTERS TYP C WÄHLEN
1N ~ 230V 50Hz
External contact for enabling GAS operation
External contact for enabling OIL operation
FGR valve closing (necessary condition for Oil operation)
Output for closing external FGR valve Prof. (Oil operation)
VOLTAGE FREE CONTACT OUTLET
USCITA CONTATTI PULITI
SORTIE CONTACTS PROPRES
AUSGANG FÜR REINKONTAKTE
max 10A AC1 230V AC
max 2A AC15 230V AC
max 0,5A 230V AC
BU = BLUE / BLU / BLEU / BLAU
BK = BLACK / NERO / NOIR / SCHWARZ
BN = BROWN / MARRONE / MARRON / BRAUN
YE = YELLOW / GIALLO / JAUNE / GELB
GN = GREEN / VERDE / VERT / GRÜN
RD = RED / ROSSO / ROUGE / ROT
WH = WHITE / BIANCO / BLANC / WEISS
OG= ORANGE / ARANCIO / ORANGE / ORANGE
VT= VIOLET / VIOLETTO / VIOLET / VIOLETT
GY= GREY / GRIGIO / GRIS / GRAU
PK= PINK / ROSA / ROSE / ROSA
GD= GOLD / ORO / OR / GOLD
TO= TURQUOISE / TURCHESE / TURQUOISE / TURKISBLAU
SR= SILVER / ARGENTO / ARGENT / SILBER
GNYE= YELLOW/GREEN / GIALLO/VERDE / JAUNE/VERT / GELB/GRUN
ELECTRICAL CONNECTIONS SET BY INSTALLER
COLLEGAMENTI ELETTRICI A CURA DELL' INSTALLATORE
ELEKTROANSCHLÜSSE VOM INSTALLATEUR AUSZUFÜHREN RACCORDEMENTS ÉLECTRIQUE EFFECTUÉ PAR L' INSTALLATEUR
Sheet : 12

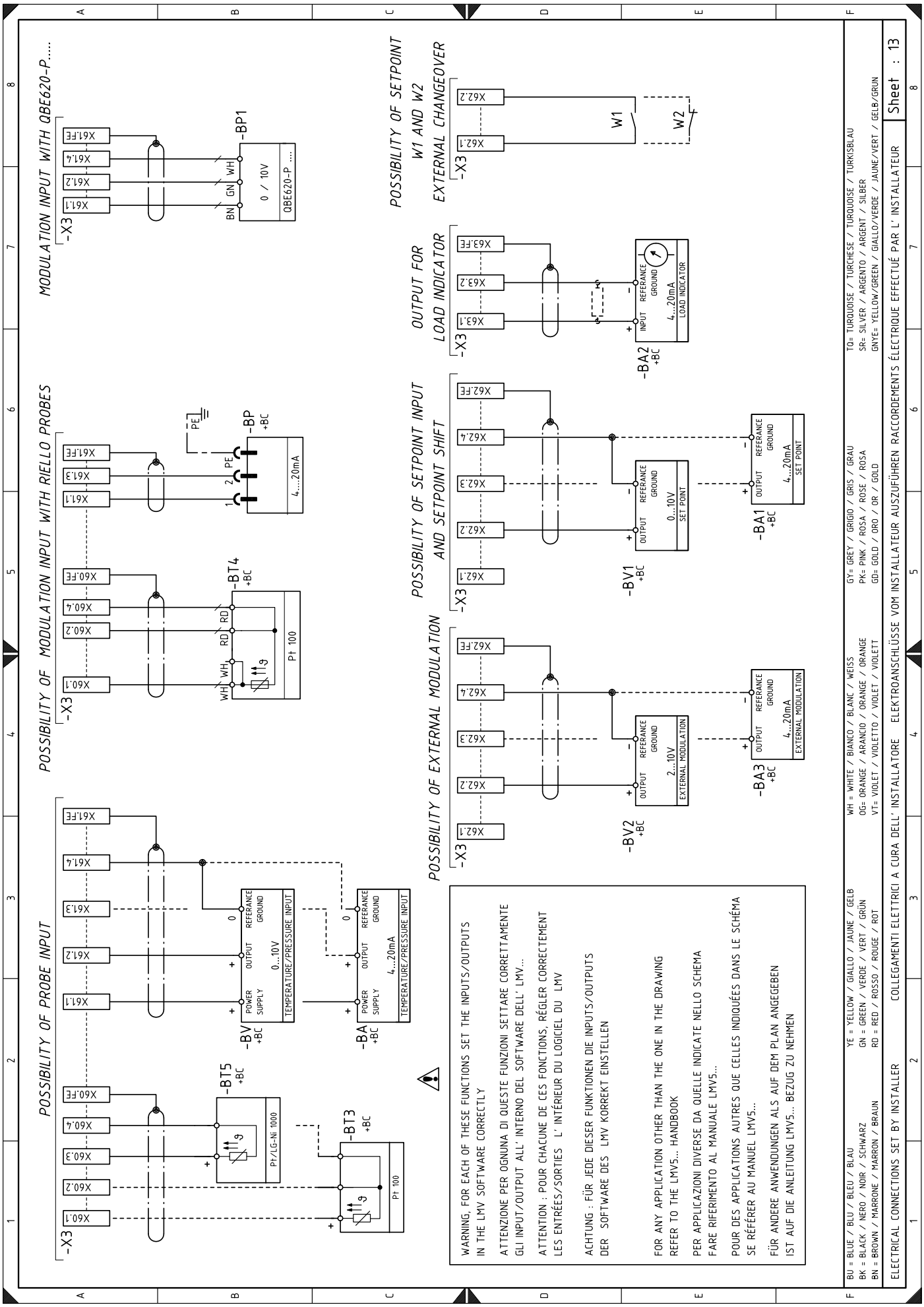
MODULATION INPUT WITH QBE620-P.....
-X3
X61.1
X61.2
X61.4
X61.FE
-BP1
QBE620-P .....
0 / 10V
BN GN WH
POSSIBILITY OF MODULATION INPUT WITH RIELLO PROBES
-BP +BC
4....20mA
PE
-BT4 +BC
Pt 100
RD WH
POSSIBILITY OF PROBE INPUT
-BT5 +BC
Pt/LG-Ni 1000
-BT3 +BC
-BV +BC
-BA +BC
TEMPERATURE/PRESSURE INPUT
POWER SUPPLY
OUTPUT
REFERANCE
GROUND
0...10V
4...20mA
POSSIBILITY OF EXTERNAL MODULATION
POSSIBILITY OF SETPOINT INPUT AND SETPOINT SHIFT
X62.1
X62.2
X62.3
X62.4
X62.FE
-BV2 +BC
EXTERNAL MODULATION
2...10V
-BV1 +BC
SET POINT
0...10V
-BA3 +BC
-BA1 +BC
4...20mA
POSSIBILITY OF SETPOINT W1 AND W2 EXTERNAL CHANGEOVER
W1
W2
OUTPUT FOR LOAD INDICATOR
X63.1
X63.2
X63.FE
-BA2 +BC
INPUT
LOAD INDICATOR
WARNING, FOR EACH OF THESE FUNCTIONS SET THE INPUTS/OUTPUTS IN THE LMV SOFTWARE CORRECTLY
ATTENZIONE PER OGNUNA DI QUESTE FUNZIONI SETTARE CORRETTAMENTE GLI INPUT/OUTPUT ALL' INTERNO DEL SOFTWARE DELL' LMV...
ATTENTION : POUR CHACUNE DE CES FONCTIONS, RÉGLER CORRECTEMENT LES ENTRÉES/SORTIES L' INTÉRIEUR DU LOGICIEL DU LMV
ACHTUNG : FÜR JEDE DIESER FUNKTIONEN DIE INPUTS/OUTPUTS DER SOFTWARE DES LMV KORREKT EINSTELLEN
FOR ANY APPLICATION OTHER THAN THE ONE IN THE DRAWING REFER TO THE LMV5... HANDBOOK
PER APPLICAZIONI DIVERSE DA QUELLE INDICATE NELLO SCHEMA FARE RIFERIMENTO AL MANUALE LMV5...
POUR DES APPLICATIONS AUTRES QUE CELLES INDIQUÉES DANS LE SCHÉMA SE RÉFÉRER AU MANUEL LMV5...
FÜR ANDERE ANWENDUNGEN ALS AUF DEM PLAN ANGEGEBEN IST AUF DIE ANLEITUNG LMV5... BEZUG ZU NEHMEN
BU = BLUE / BLU / BLEU / BLAU
BK = BLACK / NERO / NOIR / SCHWARZ
BN = BROWN / MARRONE / MARRON / BRAUN
YE = YELLOW / GIALLO / JAUNE / GELB
GN = GREEN / VERDE / VERT / GRÜN
RD = RED / ROSSO / ROUGE / ROT
WH = WHITE / BIANCO / BLANC / WEISS
OG= ORANGE / ARANCIO / ORANGE / ORANGE
VT= VIOLET / VIOLETTO / VIOLET / VIOLETT
GY= GREY / GRIGIO / GRIS / GRAU
PK= PINK / ROSA / ROSE / ROSA
GD= GOLD / ORO / OR / GOLD
TQ= TURQUOISE / TURCHESE / TURQUOISE / TÜRKISBLAU
SR= SILVER / ARGENTO / ARGENT / SILBER
GNYE= YELLOW/GREEN / GIALLO/VERDE / JAUNE/VERT / GELB/GRÜN
ELECTRICAL CONNECTIONS SET BY INSTALLER
COLLEGAMENTI ELETTRICI A CURA DELL' INSTALLATORE
ELEKTROANSCHLÜSSE VOM INSTALLATEUR AUSZUFÜHREN RACCORDEMENTS ÉLECTRIQUE EFFECTUÉ PAR L' INSTALLATEUR
Sheet : 13

Wiring layout key

+BB	Burner components
+BC	Boiler components
A4.1	Electronic cam
A9.1	Control box display
B3.1	Filter
B3.2	230/24V feeder
BA	Probe with output under current DC 4....20 mA
BA1	Device with output under current DC 4....20 mA to modify remote setpoint
BA2	Load indicator
BA3	Probe for external modulation DC 4...20 mA
BP	Pressure probe
BP1	Pressure probe
BT3	Probe Pt100, 3 wires
BT4	Probe Pt100, 3 wires
BT5	Probe PT/LG-Ni1000
BV	Output probe in voltage DC 0...10V
BV1	Output probe in voltage DC 0...10V to modify remote setpoint
BV2	Probe for external modulation 2...10V
F3.1	Auxiliary fuse
FU1	Fuse protection T4.2
FU2	Fuse protection FGR servomotors
FU3	Fuse protection FGR servomotors
H3.1	POWER ON signal button
H3.2	LANCE OIL POSITION READY signal light
H6.1	FAN MOTOR ON light signal
H7.1	BURNER ON GAS light signal
H7.2	PUMP MOTOR ON light signal
H7.3	BURNER ON OIL light signal
IN	Time switch
K3.1	Lance position ready relay
K6.1	Burner lock relay
K6.2	Fan motor control relay
K6.3	Output relay for closing ext. FGR valve
K7.1	Pump motor control relay
PA	Air pressure switch
PGM	Maximum gas pressure switch
PGMin	Min. gas pressure switch
PGVP	Leak detection control pressure switch
POM	Maximum oil pressure switch
POm	Minimum oil pressure switch
PX	Oil lance proximity switch
QRI	Flame sensor
RS	Remote reset button
S3.1	Stop button
S6.1	Fuel selector
SH6.1	Lockout/reset signal button
SM	Servomotor
T4.1	Electronic cam transformer
T4.2	Servomotor FGR transformer
TA	Ignition transformer
TL	Work thermostat
TS	Safety thermostat
VP1	Pilot valve 1
VP2	Pilot valve 2
VR1	Safety valve on oil return
VR2	Safety valve on oil return
VS1	Safety valve on oil delivery
VS2	Safety valve on oil delivery
VU	Nozzle valve
X1	Burner terminal board
X2	Clear contacts terminal board
X3	Regulation probe terminal board
X4	VSD terminal board
X5	FGR terminal board
XP	Pressure switch connectors
XPGM	PGM connector
XQRI	Flame sensor connector
XSM1	Servomotors connector
XSM2	Servomotors connector
XV	Valve connectors

RIELLO S.p.A.
I-37045 Legnago (VR)
Tel.: +39.0442.630111
http:// www.riello.it
http:// www.riello.com

Subject to modifications