principle structure

Intelligent pressure controller is an intelligent digital pressure measurement and control product integrating pressure measurement, display, output and control. The product is of all-electronic structure. The front end adopts pressure sensor with isolation film filled with oil pressure resistance. It is converted by A/D with high precision, processed by microprocessor, displayed on site, and outputs one analog quantity and four switching quantity.

The intelligent digital pressure controller is flexible to use, simple to operate, easy to debug, safe and reliable. Widely used in hydropower, tap water, petroleum, chemical industry, machinery, hydraulic and other industries, the pressure of the fluid medium field measurement display and control.

wiring diagram

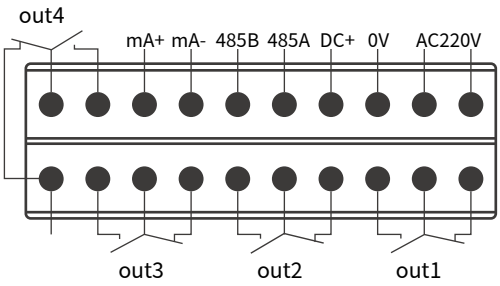

Product features

-100 Standard instrument installation
- 4-bit LED digital display
- Four-channel control point relay output
- On-site setting of control points
-4~20mA standard signal output
- The power supply can be 24VDC, 220VAC

Technical parameters

Scale range	-0.1~100MPa	Precision grade	0.5%
Overload capacity	200%	Pressure type	Gauge pressure/absolute pressure/ negative pressure/differential pressure
stability	≤0.1% /years	power supply voltage	24VDC/220VAC
Display mode	0.56" Digital tube	Display range	-1999~9999
environment temperature	-20℃ ~70℃	Relative humidity	≤80%
mounting thread	optional	material	Stainless steel

Size chart (mm)

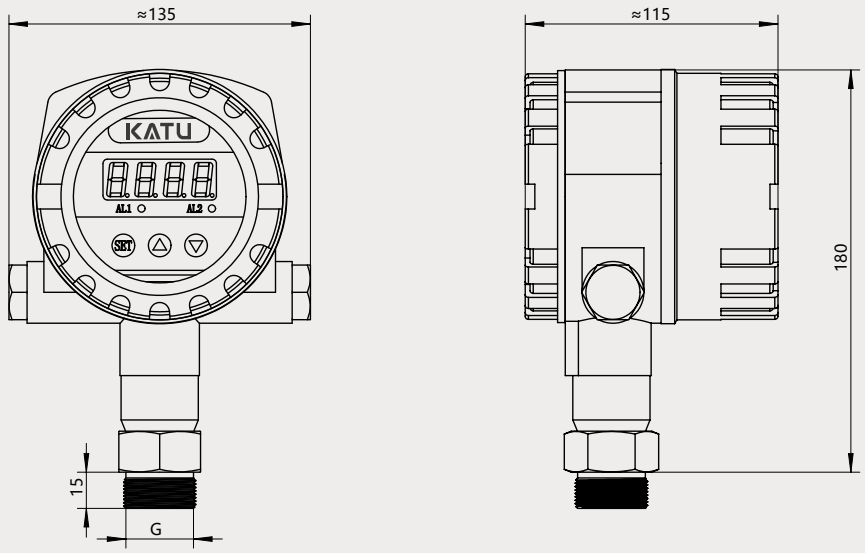

Selection table

PS430-	B	100	M 20M	DC	detailed
PS430					PS430 Intelligent pressure controller
	B				Gage pressure
	F				Negative pressure
		0001			Measuring range: -10...10KPa or 0...10KPa
		0006			Measuring range: -60...60KPa or 0...60KPa
		001			Measuring range: -1...1bar or 0...1bar
		002			Measuring range: -1...2bar or 0...2bar
		005			Measuring range: -1...5bar or 0...5bar
		010			Measuring range: 0...10bar
		025			Measuring range: 0...25bar
		060			Measuring range: 0...60bar
		100			Measuring range: 0...100bar
		160			Measuring range: 0...160bar
		250			Measuring range: 0...250bar
		400			Measuring range: 0...400bar
		600			Measuring range: 0...600bar
		1000			Measuring range: 0...1000bar
			G14M		G14 External thread
			G12M		G12 External thread
			G14K		G1/4 Internal thread
			N14M		NPT1/4 External thread
			N12M		NPT1/2 External thread
			M20M		M20*1.5 External thread(Conventional
			D25		DN25 flange
			D50		DN50 flange
				DC	power supply 24VDC
				AC	power supply 220VAC