Sensors and controllers

■Flow ■pressure ■Temperature ■level ■position

KATU 卡图

Instructions for Capacitive liquid level switch LS280

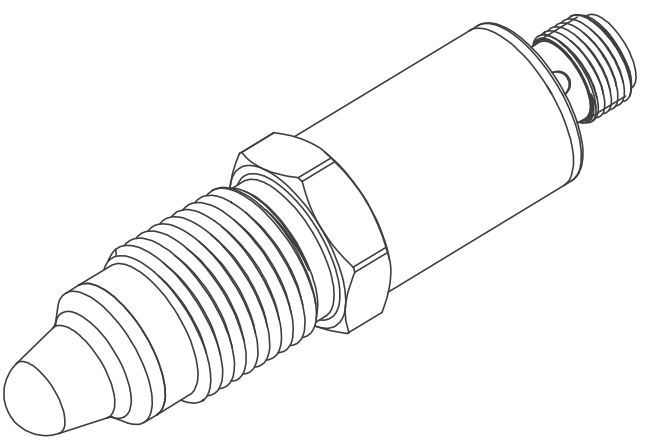

CATALOGUE

1、working principle

The electrode integrated in the sensor probe by frequency scanning technology and the surrounding environment together form a capacitance whose value depends on the dielectric constant of the medium. The capacitor and inductor coils in the sensor circuit together form a resonant circuit. Switching signals can be triggered based on the measured resonant frequency and an adjustable switching action range.

2、Product features

Intelligent frequency sweep technology is used to detect point and object position
- Reliable detection of various media
- Support various process connections
- Suitable for health industry and industrial applications
- Certified by Ship, ATEX, WHG and cULus
- Medium temperature up to 200°C

3、Technical parameters

◇ Measurement principle: liquid level switch (frequency scanning)
◇ Medium characteristics: DC > 1.5
◇ Lag: ±1mm
◇ Repeat accuracy: ±1mm
◇ Response time: 0.1s, TYP. 0.2 s, Max.
◇ Damping time: 0... 10s, adjustable
◇ Liquid receiving parts material: PEEK Natura 316 l (1.4404)
◇ Surface roughness of the receiving parts: Ra ≤ 0.8 μm
◇ Output type: PNP/NPN
◇ Switch logic: NORMALLY closed (NC)/ normally open (NO)
◇ EMC Electromagnetic radiation: EN 61326, installed in a sealed metal canister
◇ EMC Electromagnetic immunity: EN 61326, installed in an airtight metal can

4、Size chart

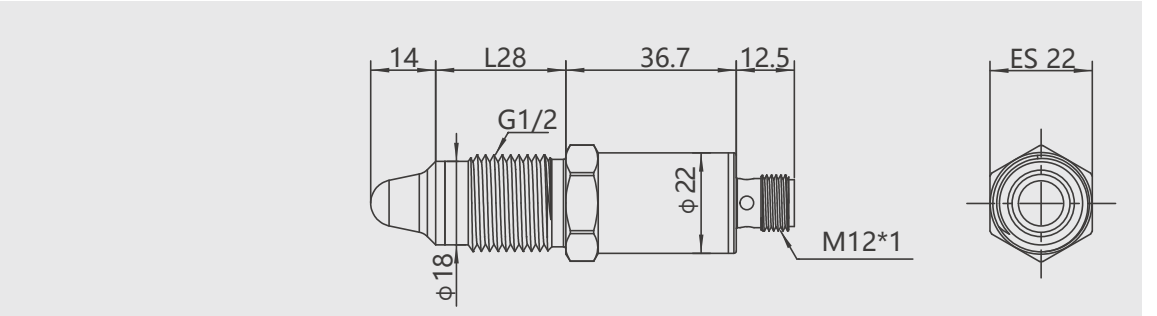

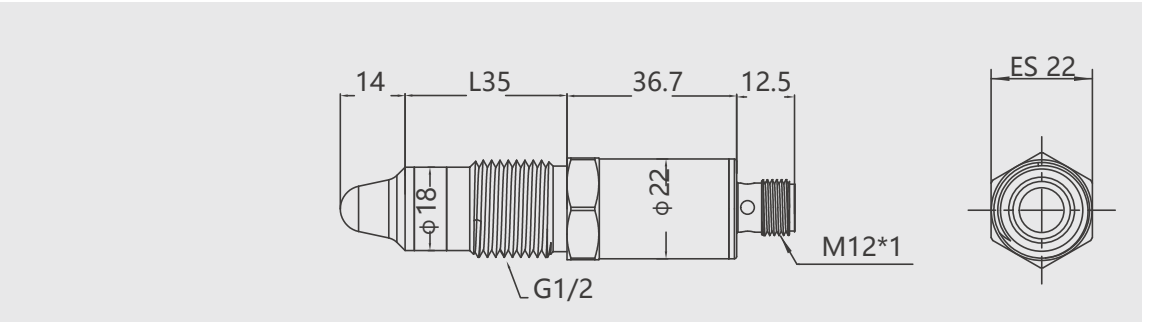

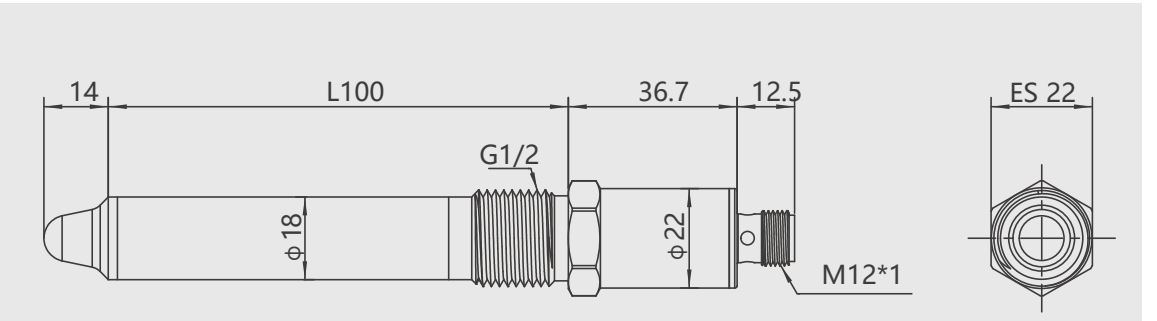

5，wiring diagram

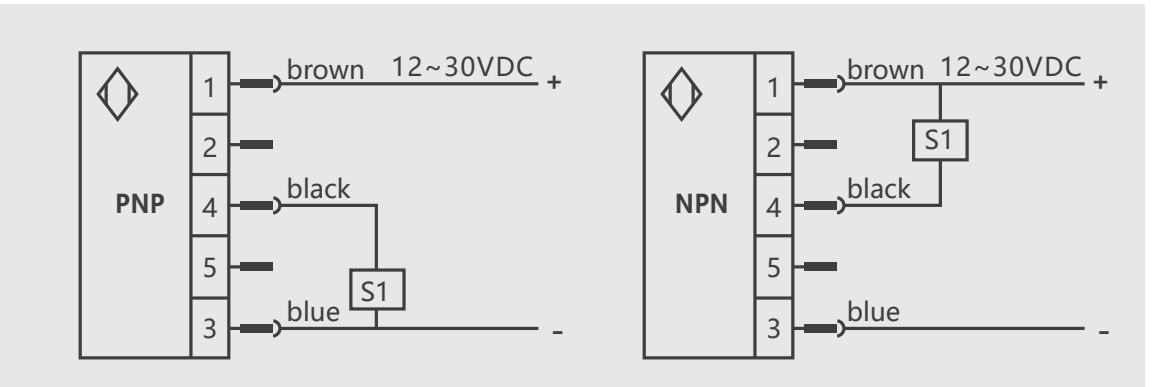

6, installation

name	Outline drawing/dimension drawing（mm）
Sanitary chuck installation accessories KTYLLC13868	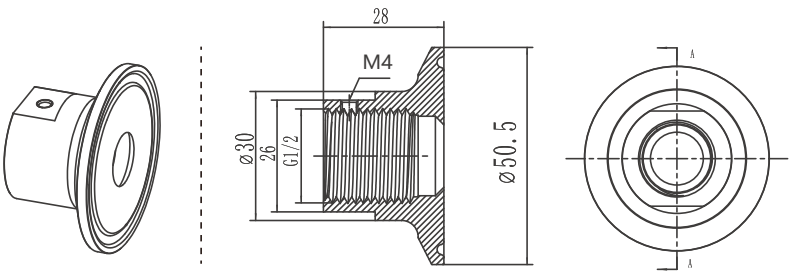
Welding the base KTYLLC13867	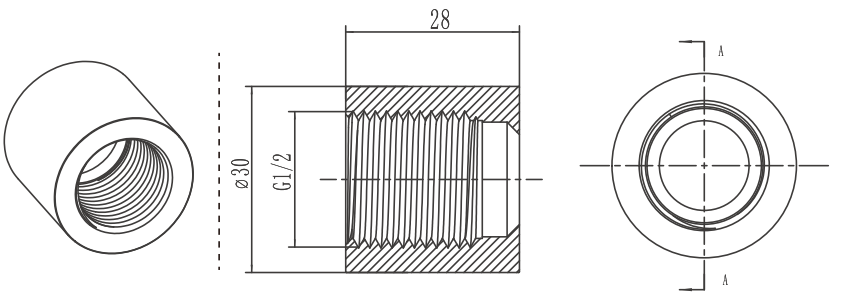

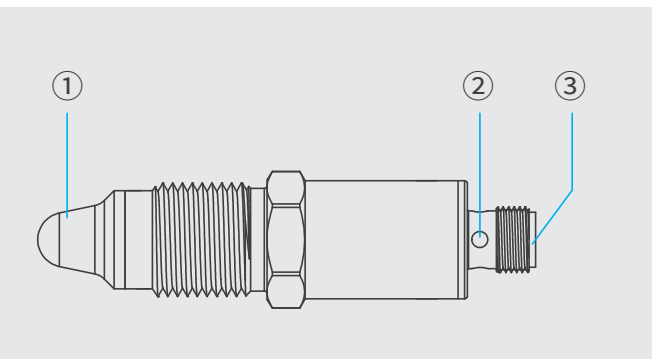

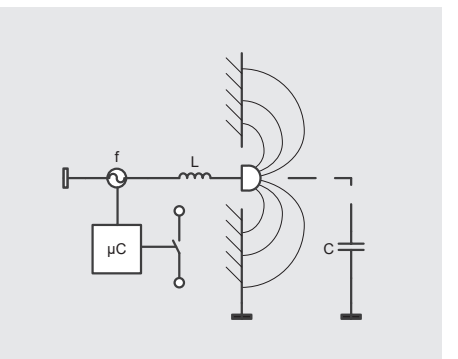

① Sensor tip
(2) LED display
③ Cable outlet connection

The electrodes integrated into the sensor tip form a capacitor with the environment. The capacity value determined by the medium depends on its permittivity (dc value). A resonant circuit occurs with a coil in the sensor electronics.
Based on the measured resonant frequency and programmable trigger threshold, the switching signal is activated.

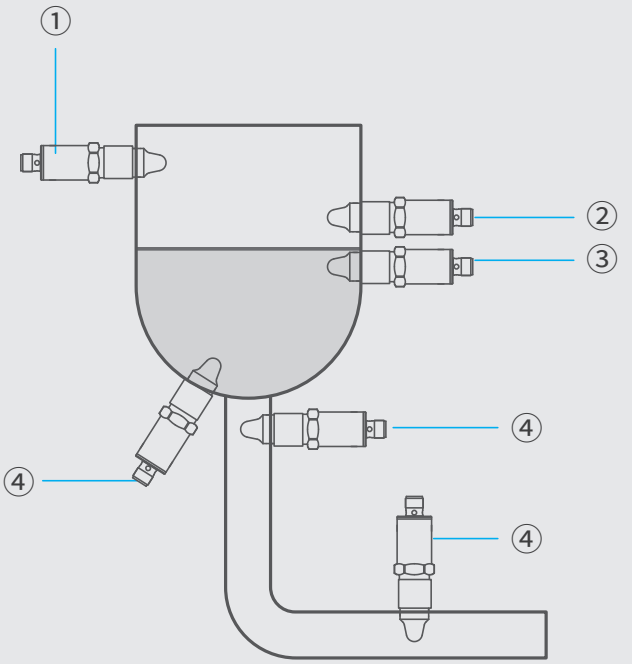

Standard installation

① Over-filling protection
② Limit level, maximum.
③ Limit level, minimum value.
④ Dry dry protection

The sensor can be installed at any point in the container. Mounted in a container

(1) Sensors on the top ensure to prevent over-filling. Further downward connected sensors can detect the maximum

(2) or minimum

(3) Limit level. Mount on bottom or output tube

(4) The sensor can protect the pump from dry operation.

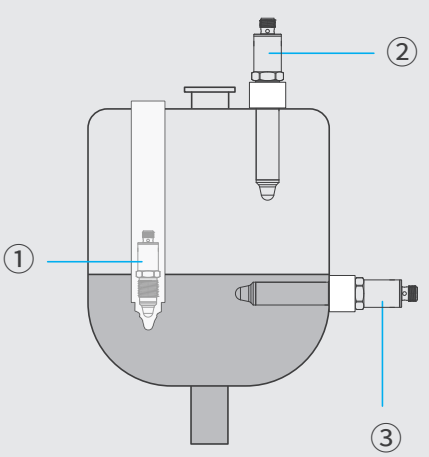

Installation of extendable sensors

① Limit grade: installation with pipe
② Backfill protection device (lengthen)
③ Limited water level of paste or powder medium (lengthen)

Diameter:
lengthen: 82mm (fixed)
custom: 15... 228mm (adjustable)
Adjustable version L allows bridge span tank insulation.
In a mushy or powdery medium, the deeper the tilt,
Make the sensor less prone to clogging.

Installation in industrial applications

⚠ Hazard Risk of injury due to hazardous media Wear hazardous media (such as protective equipment, such as acid or alkali).
Empty containers and pipes before installation.

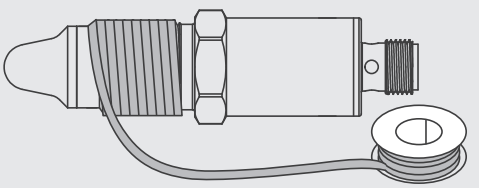

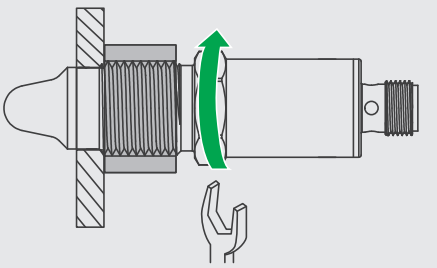

Containers and pipes do not contain media. Seal the thread on the sensor with teflon tape. Screw in sensor. Tightening torque GxxA: maximum 30Nm. Tighten torque XX-14NPT: Max. 20Nm.

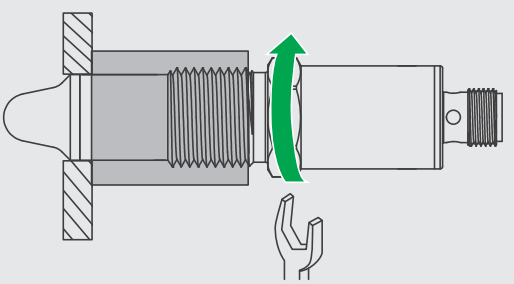

For these process connections, do not use polytetrafluoroethylene tape (PTFE) or elastomers for sealing.
(1) Vessels and pipelines do not contain media.
(2) Adapter or welded sleeve installation without dead space. Screw in sensor.
Tightening torque: 15.. 20Nm

Vessels and pipelines do not contain media.
Push the seal ring.
Screw in sensor.
Tightening torque: 15.. 20Nm

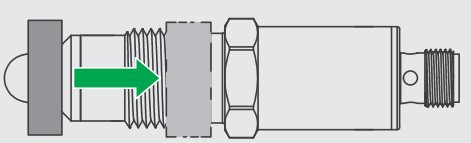

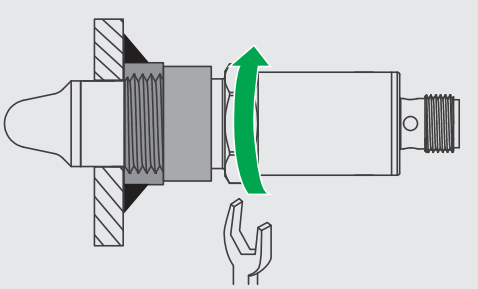

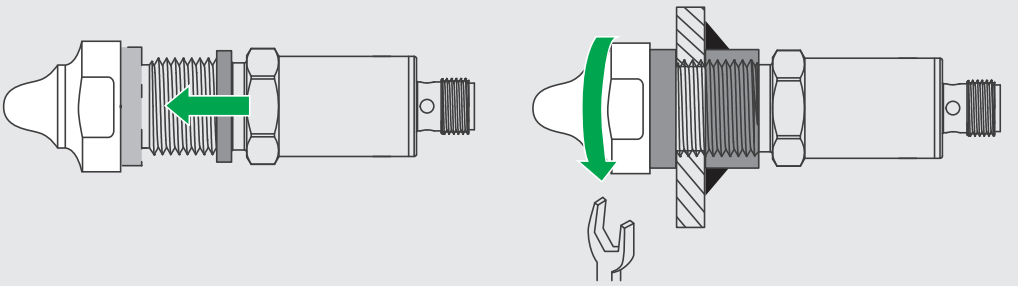

Vessels and pipelines do not contain media.
Push the seal ring.
Screw in sensor.
Tightening torque: 15.. 20Nm

Installation for health applications

Warning of health risks from contaminated media only use Baumer tubing company welded sleeves or adapters.
Do not use polytetrafluoroethylene tape (PTFE) or elastomer sealing process connectors.
Welding must be performed only by welders trained in the sanitary field.

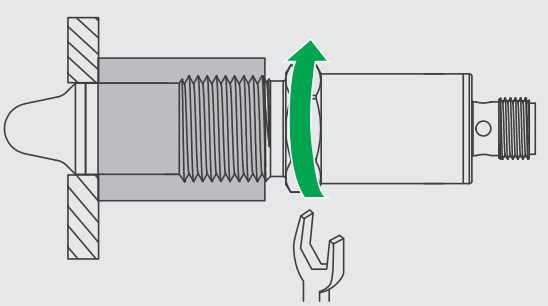

(1) Welded sleeves or adapters must be hygienically installed and internally flushed.
(2) The weld shall be smooth to Ra<0.8µm.
(3) The leakage hole points downward.
Screw in sensor.
Tightening torque: 10.. 15Nm

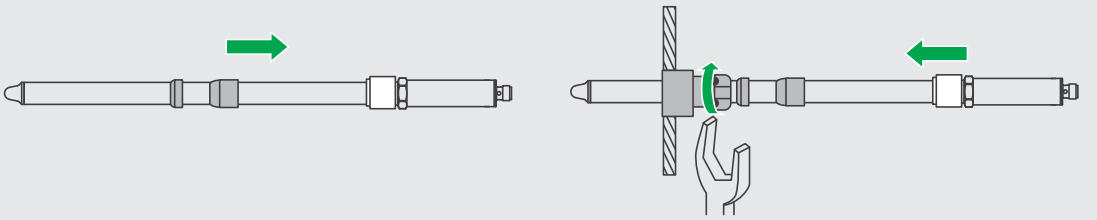

(1) Welded sleeves or adapters must be hygienically installed and internally flushed.
(2) The weld shall be smooth to Ra<0.8μm.
(3) The leakage hole points downward.
(4) Clamping rings must be in good condition (if deformation occurs,
please change two clamping rings).
Push the wider clamping ring onto the catheter.
Push the narrow clamping ring onto the catheter.
Location sensor. Adjust the depth of inclination.
Projection length: 15... 228mm Tighten the screw latch.
Tightening torque: 10.. 15Nm

Example of installing welded casing

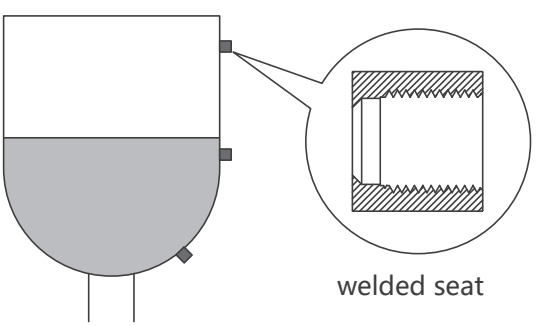

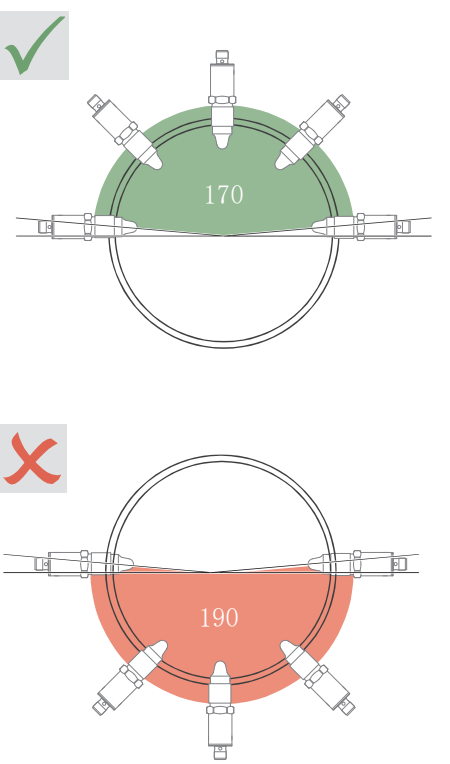

7、debugging

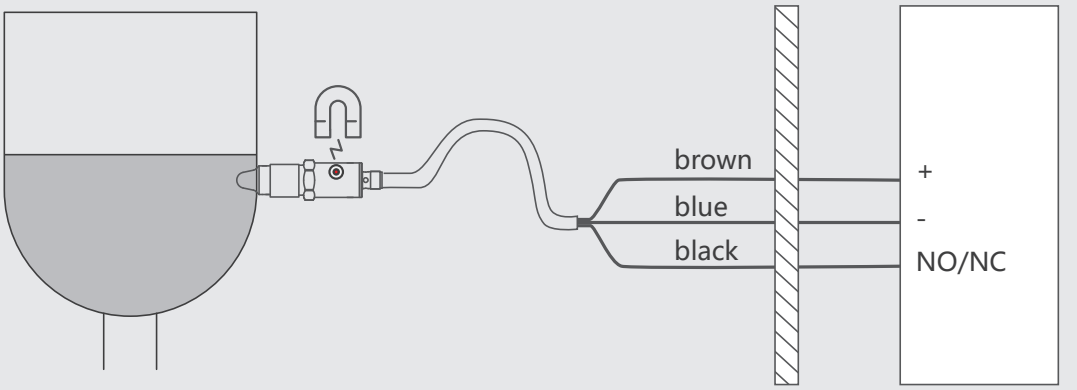

Switch point setting

1. The probe touches the object to be measured, and the handheld magnetic pen is placed at the sensor induction.
2. The red light/green light flashes alternately, remove the magnetic pen, and the switch point is set successfully.

Toggle normally open/normally closed

1. Place the handheld magnetic pen on the sensor, until the LED light stops flashing and the color is switched successfully.
2. Move the magnetic pen away, and the normally open/normally closed switch is successful.

Operator calibration

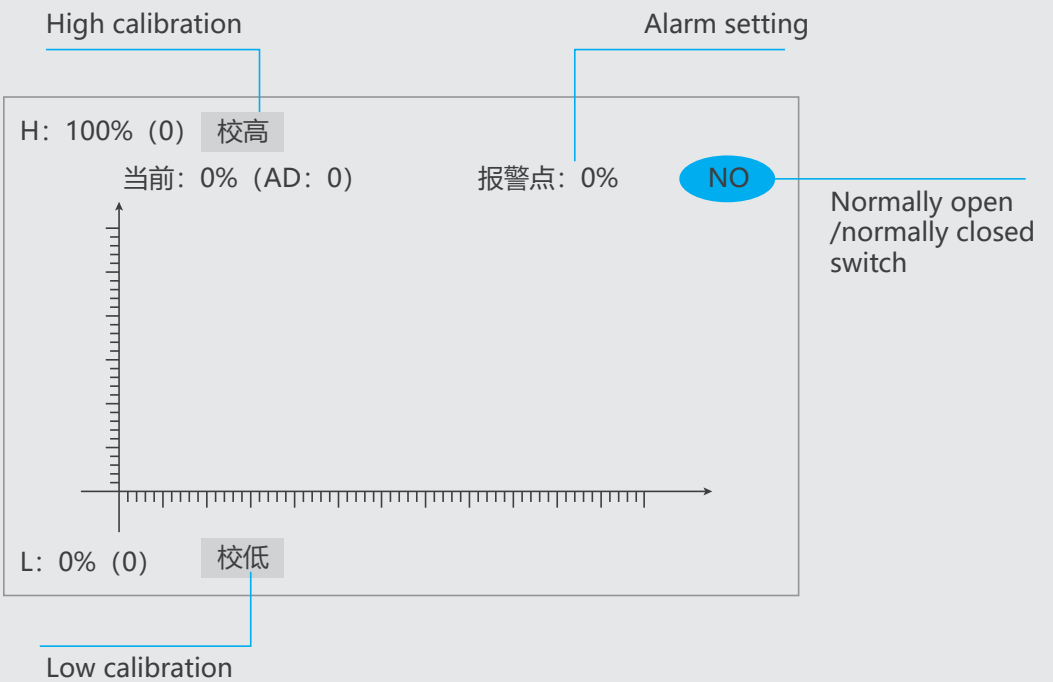

Air click to adjust low , calibrate low 0%.

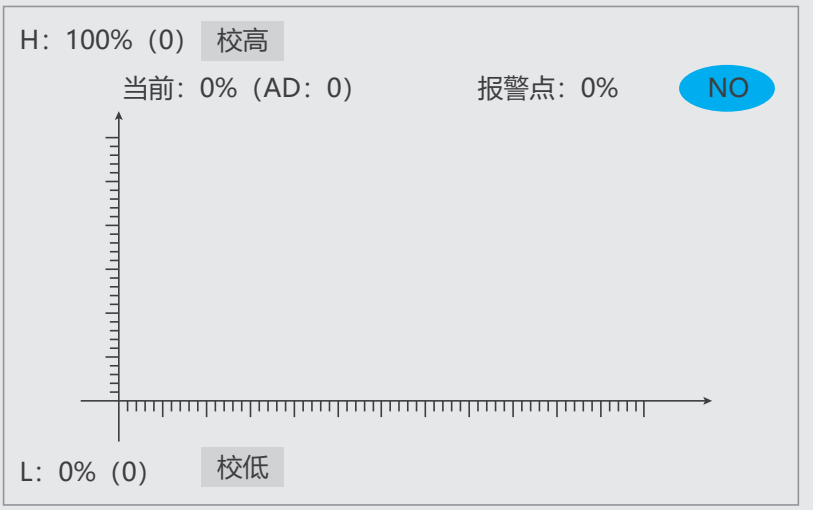

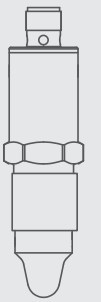

In the medium, click to calibrate the height and calibrate the height 100%.

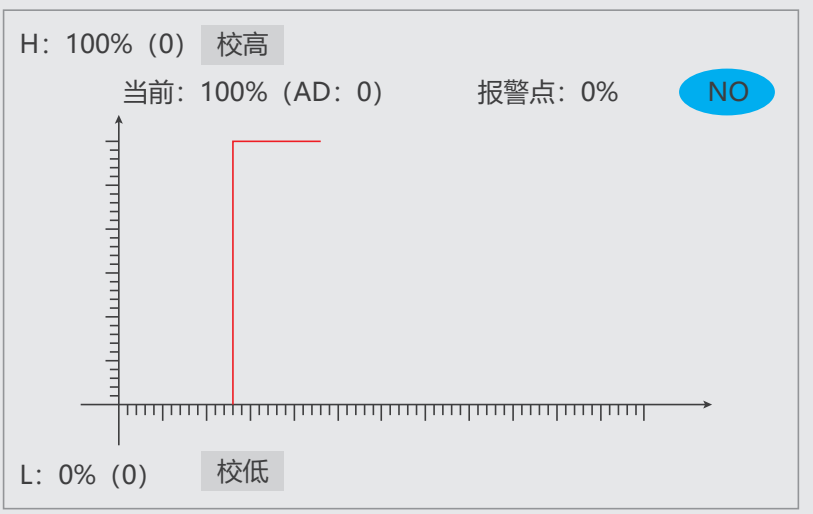

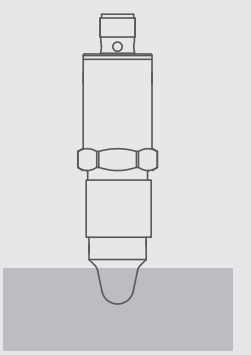

Katu Electronic （Kunshan）Co.,Ltd.

phone：400-150-8815

Web： www.katusensor.com

address：Building 23, no.338 xugongqiao road, huaqiao international business city, kunshan city, suzhou city

factory1：1120 jinyang east road, kunshan city, suzhou city

factory2：1068 jinyang east road, kunshan city, suzhou city (guorui pioneering park)