Drainage system

Principle features

- Liquid crystal display on-site instantaneous flow, cumulative flow and temperature
-2 groups of 4-20mA analog signal output; 2 groups of alarm point functions for flow and temperature
- Support digital output, RS485 can be customized
-Can monitor gas, liquid
- Not affected by pipeline static pressure
-Simple structure, no moving parts
-Easy installation, no on-site calibration and debugging, maintenance-free

Applications

-Cooling water, circulating water,critical water flow monitoring
- flow monitoring of organic matter and inorganic matter solution
- flow monitoring of gas (oxygen, nitrogen, ammonia, natural gas, etc.)
- Antifreeze protection, sprinkler system, sewage protection, etc.
- Strong anti-fouling ability
-LED digital LCD display

technical parameter

◇Flow range:
Liquid: 0.4-400 L/min, depending on the pipe size.
Please refer to the flow range table for specific standard flow rates.
Gas: Calculated according to specific application
◇Temperature range: 0~100℃
◇Accuracy: <±3.0%F.S (flow rate), <±1.0℃ (temperature)
◇Repeatability: <2.0%
◇Wetted material: Pom/SUS304 (stainless steel)
◇Pressure level: 10bar (maximum pressure 16bar)
◇Ambient temperature: -10...65℃
◇Medium temperature: -20~100℃

◇Process connection : Thread type: G3/8~G1-1/2
◇ Power supply: 18-30VDC
◇Digital display: OLED LCD screen (1-1/2')
◇Linearization: 5-point flow linear curve
◇Alarm contacts: 2 independent alarm switches,
which can be set by the user within the full range.
Switching capacity, 24VDC/400mA
◇Signal output : Three-wire system 4-20mA,
which has a linear relationship with flow and temperature,
and can be set arbitrarily within the user's range.
Maximum 500Ω, pulse frequency can be customized,
maximum 1 kHz, user can set,
For example 1 pulse/liter or 1 liter/pulse can be customized RS485

Panel Schematic

LCD

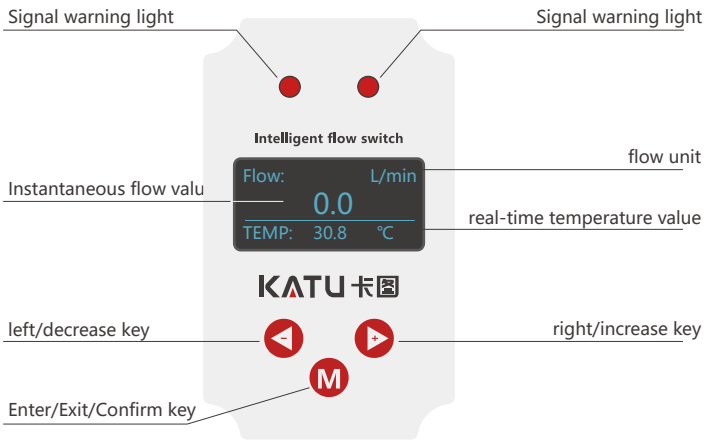

no display

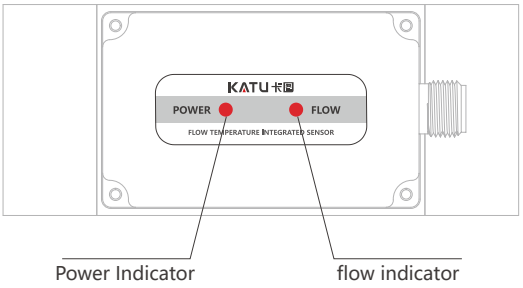

LCD display/wiring diagram

Brown	**1**	Power is positive
Grey	**2**	Flow analog
Green	**3**	temperature analog
Pink	**4**	
Blue	**5**	negative power supply
Red	**6**	
yellow	**7**	Temperature Switches
White	**8**	Flow Switch

PNP+(4-20mA)

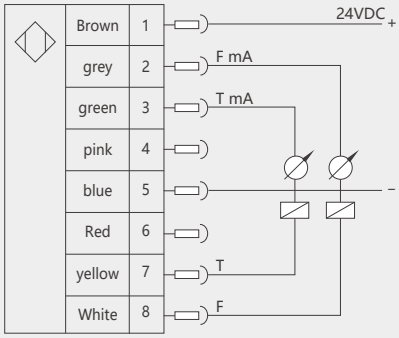

NPN+(4-20mA)

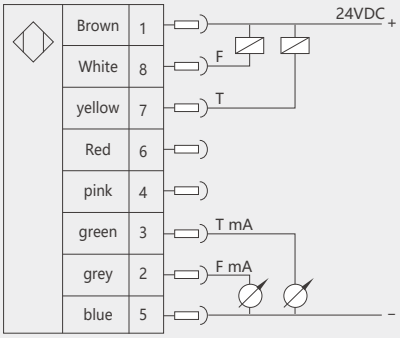

No display/wiring diagram

brown	**1**	Power is positive
black	**2**	temperature analog
blue	**3**	negative power supply
White	**4**	Flow pulse
grey	**5**	Flow analog

4-20mA+P/L

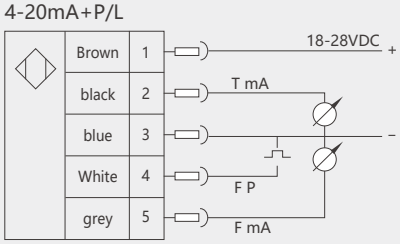

Dimensions (mm)

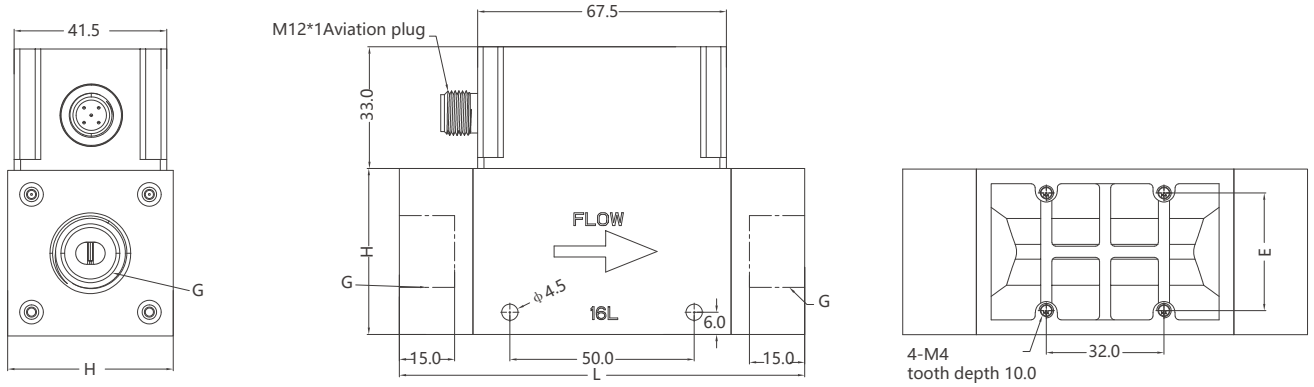

Selection code	Process connection (G)	Body height H(mm)	Mounting hole E(mm)	Overall length L(mm)	Measuring range L/min
016A	3/8	45*45	32*32	110	2-16
016B	1/2				
040A	1/2				5-40
040B	3/4				
100A	3/4				10-100
100B	1				
250A	1-1/4	58*58	32*31	114	50-250
250B	1-1/2				
400A	1-3/4	65*65	32*31	130	100-400
400B	2“				

Mounting bracket size (mm)

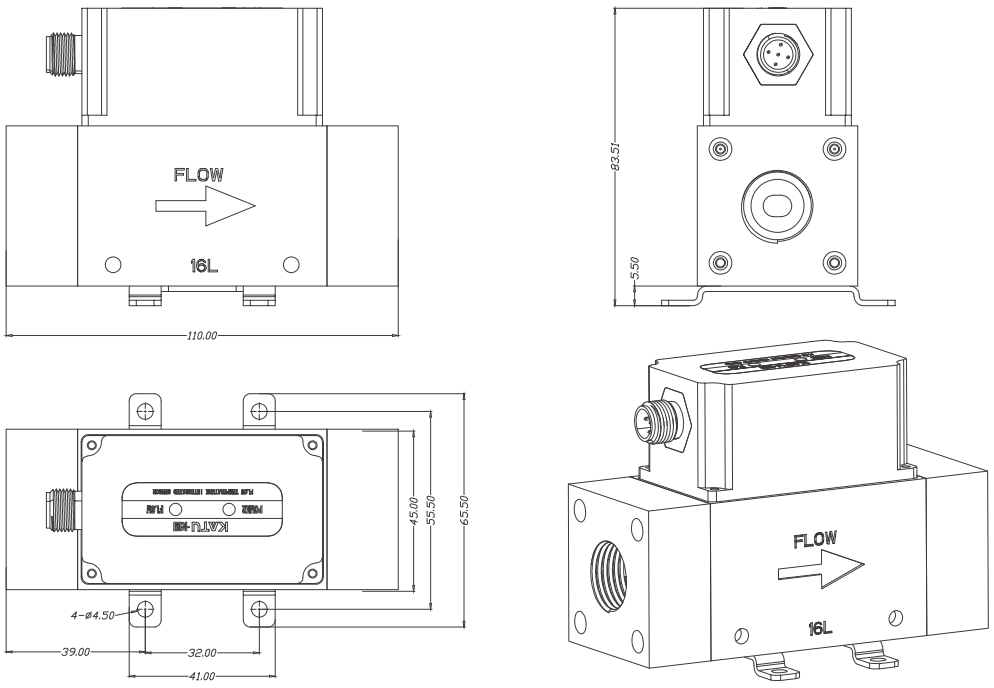

FTS500-16/40/100 Bracket size

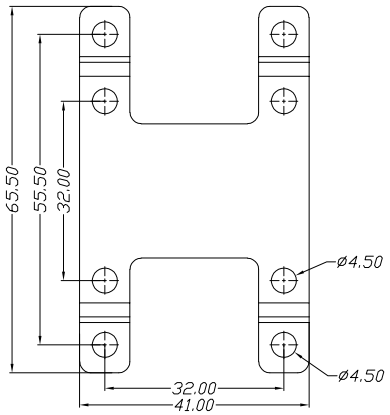

FTS500-250 Bracket size

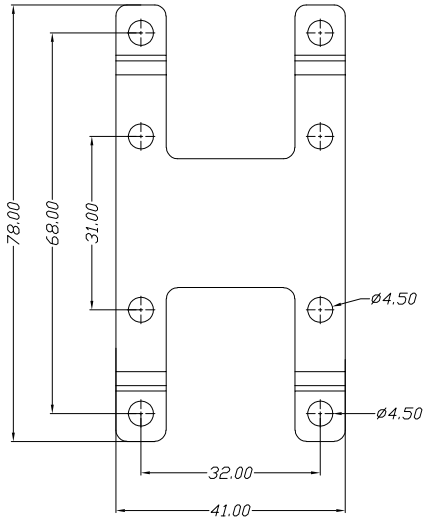

FTS500-400 Bracket size

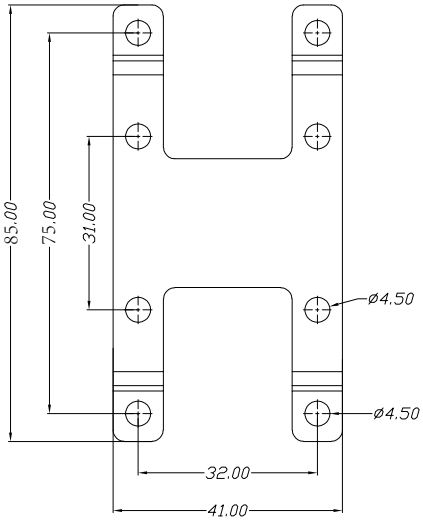

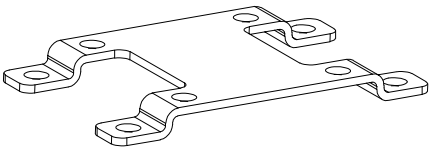

Selection table

FTS500-	016A	GK	P	-	-	detail
FTS500						FTS500-Flow temperature integrated sensor
	016A					Please refer to the selection code of the range table for details.
		GK				Internal thread G tooth
		RK				Internal thread R teeth
			P			PNP output
			N			NPN output
				-		no display
				-1		With LCD display
					-	No mounting bracket
					-T	With mounting bracket