Principle and characteristic

FC370 series baffle-type flow switch is a new structure flow switch developed by our company's researchers specializing in flow and differential pressure meters to analyze the shortcomings of current flow switches in the market. It follows the simple and reliable design concept, and greatly improves the reliability of flow switches from the structure, which can be compared with non-traditional target flow switches. Plug - in installation, mechanical flow switch. Built-in micro trigger switch. Minimal pressure loss, good repeatability, anti-fouling ability, through the knob to achieve accurate switching Settings. The mechanical part is securely isolated from the electronic part. The product does not contain bellows which are easy to cause faults. The electrical parts do not directly contact with metal parts with large temperature difference, and there is no problem that the electrical parts will produce condensate water and lead to corrosion. It has a variety of types for customers to choose to adapt to different applications. The use of imported micro switch as an electrical action part, through the current is large, completely avoid the use of magnetic switch improper easy to damage the problem, is the central air conditioning and industrial fluid control of the preferred flow protection products.

Product application

Gas-liquid dual-use, can be widely used in industrial automation/mechanical equipment/air compression industry/refrigeration and air conditioning field. Flow switch magnets are not in flowing waterways and can be used in sewage systems and work properly.

Wiring diagram (common joint)

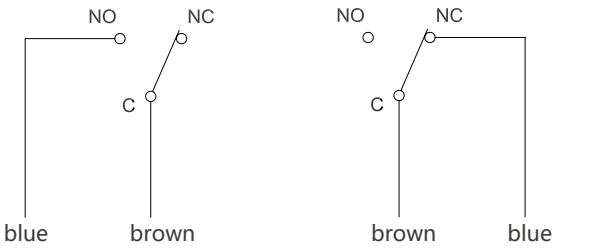

Normally open wiring diagram A

Normally closed wiring diagram B

Wiring diagram (DIN 43650 connector)

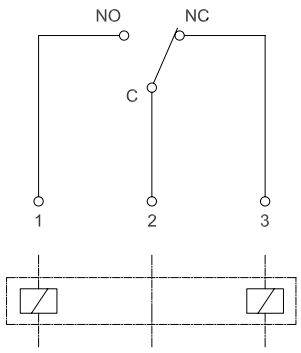

Applicable medium

water gas

oil Note: Please specify other media when ordering.

Technical parameter

- ◇ Voltage: No status indicator, the maximum voltage can be reached 250VAC, with status indicator, voltage is 24 VDC plus or minus 10%
- ◇ Maximum current (switch capacity) : 5A
- ◇ Connection mode: DIN 43650A connector/direct wire optional
- ◇ Output: SPDT micro switch, one point/two point output Select, and optionally with a status indicator
- ◇ Pressure resistance: 25bar (higher pressure can be customized)
- ◇ Average pressure loss: 0.01bar (maximum flow)
- ◇ Operating temperature: -10... 80 ℃
- Shell protection grade: IP65
- ◇ Material: Liquid shell: nickel-plated brass
- Baffle: stainless steel
- Seal: NBR
- Electrical housing: ABS

Dimensional drawing (mm)

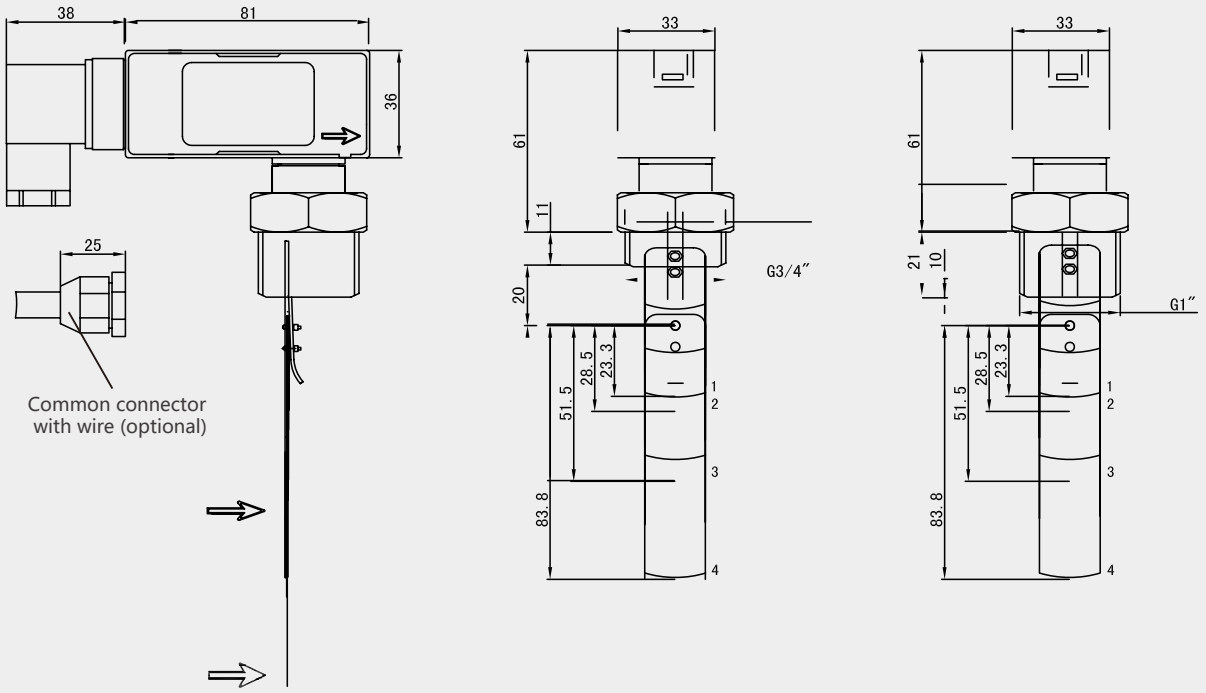

Size drawing (no tee)

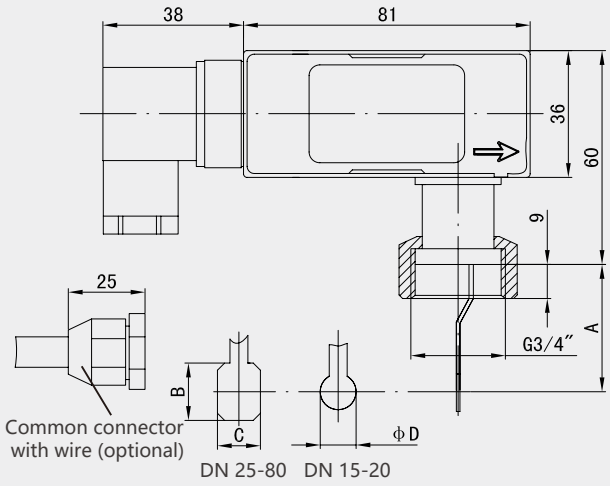

Size drawing (with tee)

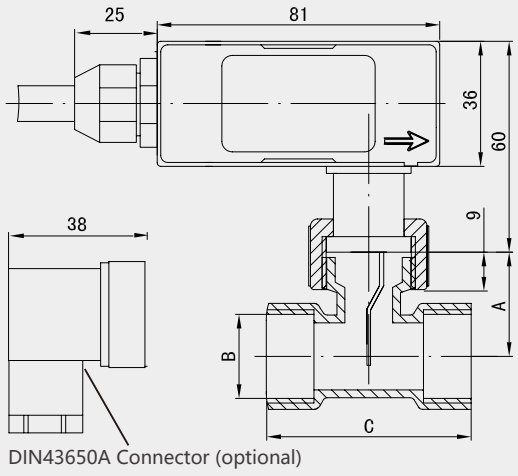

FC370-A Tee with internal thread

型号	A	B	C
FC370-015TK	28	1/2″	50
FC370-020TK	28	3/4″	58
FC370-025TK	34	1″	58
FC370-032TK	34	1-1/4″	72

Selection table

FC370-	020	T	RK	D	L08	detail
FC370-						Baffle type flow switch
	015					Pipe connection thread: G1/2
	020					Pipe connection thread: G3/4
	025					Pipe connection thread: G1
	032					Pipe connection thread: G1-1/4
	040					Pipe connection thread: G1-1/2
	050					Pipe connection thread: G2
		T				Liquid shell material: nickel plated brass
			K			Interface type: internal thread tee at both ends
			M			Interface type: Both ends are tees with external thread
				D		Cable connector type: DIN 43650 connector
				-		Cable interface type: Common connector directly attached to the cable, no special instructions default normally open
					-L08	Wiring length: The wiring length is 0.8M

Selection reference

Pipe diameter	Model number	Flow range l/min(water) A	Flow range l/min(water) B	Maximum allowable flow l/min(water)
DN15	FC370-015TK	5.3(4.5)~ 7.2(6.1)	6.1(5.2)~ 8.2(7.0)	20
DN20	FC370-020TK	9.4(8.0)~ 12.8(10.8)	10.5(9.0)~ 14.5(12.0)	40
DN25	FC370-025TK	14.7(12.5)~ 19.9(16.9)	16(14)~ 22(19)	60

Note: In the flow range parameters in the table above, the action flow point is outside the parentheses and the reset flow point is inside the parentheses.