MSVL-G3/8

管式顺序阀
In-line Sequence Valve

机能符号 Symbol

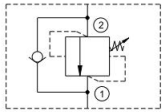

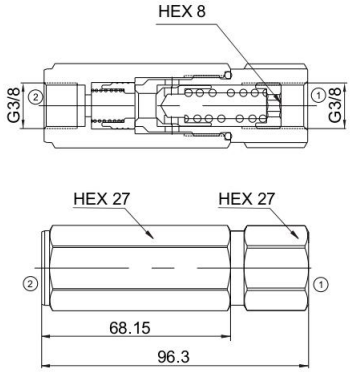

技术参数 Specifications

· 工作压力 Operating Pressure	350BAR
· 流量 Flow	40L/min
· 内泄漏 Internal Leakage	5drop/min.max.to 80% of norminal setting
· 弹簧调压范围 Standard Spring Ranges:	0-350BAR
· 温度 Temperature	-30°C to +120°C(-22°F to+250°F)
· 流体 Fluids	Mineral-based fluids with viscosities of 7.4 to 420 cSt.

工作 Operation

油液从①到②单向阀开启压力 9bar，②压力直到上升到此阀的设置压力，②到①打开。

Pressure at ① overcomes the spring-bias pressure 9 bar and allows free flow to ②, ② pressure increases to meet the valve setting, allow flow from ② to ①.

压力-流量性能曲线
Performance Curve Pressure Drop vs.Flow

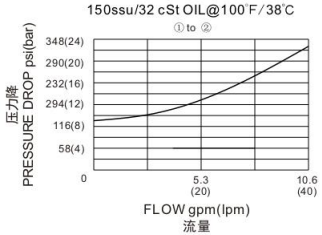

压力-流量性能曲线
Performance Curve Pressure Drop vs.Flow

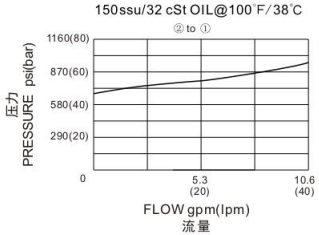

订购型号 Order Type

MSVL-G3/8 - *

Ⅰ. 油封 Seal-Kits
N=丁腈橡胶 Buna N
V=氟橡胶 Viton

MSVL-G1/2

管式顺序阀
In-line Sequence Valve

机能符号 Symbol

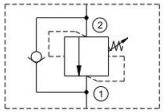

A

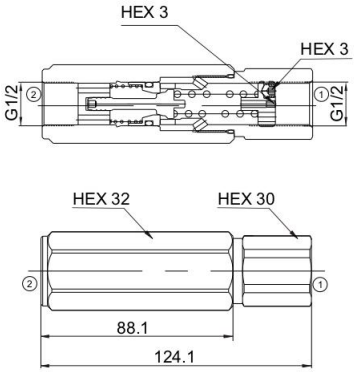

技术参数 Specifications

· 工作压力 Operating Pressure	350BAR
· 流量 Flow	80L/min
· 内泄漏 Internal Leakage	5drop/min.max.to 80% of norminal setting
· 弹簧调压范围 Standard Spring Ranges:	0-350BAR
· 温度 Temperature	-30°C to +120°C(-22°F to+250°F)
· 流体 Fluids	Mineral-based fluids with viscosities of 7.4 to 420 cSt.

工作 Operation

油液从①到②单向阀开启压力 2bar，②压力直到上升到此阀的设置压力，②到①打开。

Pressure at ① overcomes the spring-bias pressure 2 bar and allows free flow to ②, ② pressure increases to meet the valve setting, allow flow from ② to ①.

压力-流量性能曲线
Performance Curve Pressure Drop vs.Flow

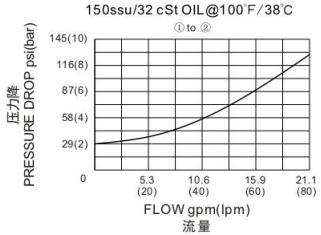

压力-流量性能曲线
Performance Curve Pressure Drop vs.Flow

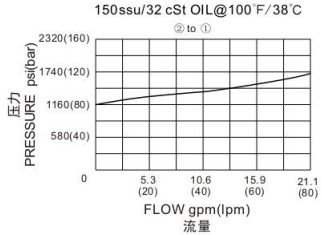

订购型号 Order Type

MSVL-G1/2 - *

Ⅰ. 油封 Seal-Kits
N=丁腈橡胶 Buna N
V=氟橡胶 Viton