General Description

The GreenMOS® high voltage MOSFET utilizes charge balance technology to achieve outstanding low on-resistance and lower gate charge. It is engineered to minimize conduction loss, provide superior switching performance and robust avalanche capability.

The GreenMOS® Generic series is optimized for extreme switching performance to minimize switching loss. It is tailored for high power density applications to meet the highest efficiency standards.

Features

- Low $R_{DS(ON)}$ & FOM
- Extremely low switching loss
- Excellent stability and uniformity

Applications

- PC power
- LED lighting
- Telecom power
- Server power
- EV Charger
- Solar/UPS

Key Performance Parameters

Parameter	Value	Unit
$V_{DS,}$ @ $T_{j(max)}$	950	V
$I_{D,\ pulse}$	26	A
$R_{DS(ON)\ ,\ max}$ @ V_{GS}=10V	250	mΩ
Q_g	41	nC

Marking Information

Product Name	Package	Marking
OSG90R250FF	TO220F	OSG90R250F

Package & Pin Information

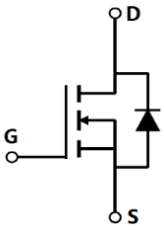

Absolute Maximum Ratings at T_j=25°C unless otherwise noted

Parameter	Symbol	Value	Unit
Drain-source voltage	V_{DS}	900	V
Gate-source voltage	V_{GS}	±30	V
Continuous drain current[1], T_C=25 °C	I_D	16	A
Continuous drain current[1], T_C=100 °C		10	
Pulsed drain current[2], T_C=25 °C	$I_{D, pulse}$	26	A
Continuous diode forward current[1], T_C=25 °C	I_S	16	A
Diode pulsed current[2], T_C=25 °C	$I_{S, pulse}$	26	A
Power dissipation[3], T_C=25 °C	P_D	35	W
Single pulsed avalanche energy[5]	E_{AS}	338	mJ
MOSFET dv/dt ruggedness, V_{DS}=0…480 V	dv/dt	50	V/ns
Reverse diode dv/dt, V_{DS}=0…480 V, $I_{SD} \leq I_D$	dv/dt	15	V/ns
Operation and storage temperature	T_{stg}, T_j	-55 to 150	°C

Thermal Characteristics

Parameter	Symbol	Value	Unit
Thermal resistance, junction-case	$R_{\theta JC}$	3.57	°C/W
Thermal resistance, junction-ambient[4]	$R_{\theta JA}$	62.5	°C/W

Electrical Characteristics at T_j=25°C unless otherwise specified

Parameter	Symbol	Min.	Typ.	Max.	Unit	Test condition
Drain-source breakdown voltage	BV_{DSS}	900			V	V_{GS}=0 V, I_D=250 uA
Gate threshold voltage	$V_{GS(th)}$	2.9		3.9	V	V_{DS}=V_{GS}, I_D=250 μA
Drain-source on-state resistance	$R_{DS(ON)}$		0.22	0.25	Ω	V_{GS}=10 V, I_D=8 A
			0.68			V_{GS}=10 V, I_D=8 A, T_j=150 °C
Gate-source leakage current	I_{GSS}			100	nA	V_{GS}=30 V
				-100		V_{GS}=-30 V
Drain-source leakage current	I_{DSS}			10	μA	V_{DS}=900 V, V_{GS}=0 V
Gate resistance	R_G		1.5		Ω	f = 1 MHz, Open drain

Dynamic Characteristics

Parameter	Symbol	Min.	Typ.	Max.	Unit	Test condition
Input capacitance	C_{iss}		3270		pF	V_{GS}=0 V, V_{DS}=50 V, f=100 kHz
Output capacitance	C_{oss}		130		pF	
Reverse transfer capacitance	C_{rss}		4.9		pF	
Effective output capacitance, energy related	$C_{o(er)}$		87		pF	V_{GS}=0 V, V_{DS}=0 V-400 V
Effective output capacitance, time related	$C_{o(tr)}$		421		pF	
Turn-on delay time	$t_{d(on)}$		18		ns	V_{GS}=10 V, V_{DS}=400 V, R_G=2 Ω, I_D=8 A
Rise time	t_r		6		ns	
Turn-off delay time	$t_{d(off)}$		40		ns	
Fall time	t_f		7		ns	

Gate Charge Characteristics

Parameter	Symbol	Min.	Typ.	Max.	Unit	Test condition
Total gate charge	Q_g		41		nC	V_{GS}=10 V, V_{DS}=400 V, I_D=8 A
Gate-source charge	Q_{gs}		15		nC	
Gate-drain charge	Q_{gd}		7		nC	
Gate plateau voltage	$V_{plateau}$		5		V	

Body Diode Characteristics

Parameter	Symbol	Min.	Typ.	Max.	Unit	Test condition
Diode forward voltage	V_{SD}			1.3	V	I_S=16 A, V_{GS}=0 V
Reverse recovery time	t_{rr}		362		ns	V_R=400V, I_S=8 A, di/dt=100 A/μs
Reverse recovery charge	Q_{rr}		5.7		μC	
Peak reverse recovery current	I_{rrm}		27.6		A	

Note

1) Calculated continuous current based on maximum allowable junction temperature.
2) Repetitive rating; pulse width limited by max. junction temperature.
3) Pd is based on max. junction temperature, using junction-case thermal resistance.
4) V_{DD}=100 V, V_{GS}=10 V, L=75 mH, starting T_j=25 °C.

Electrical Characteristics Diagrams

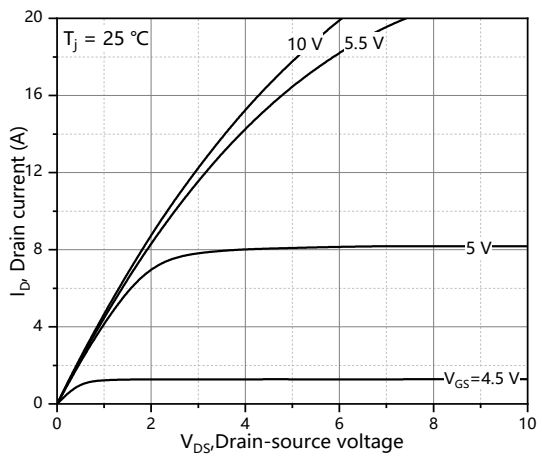

Figure 1. Typ. output characteristics

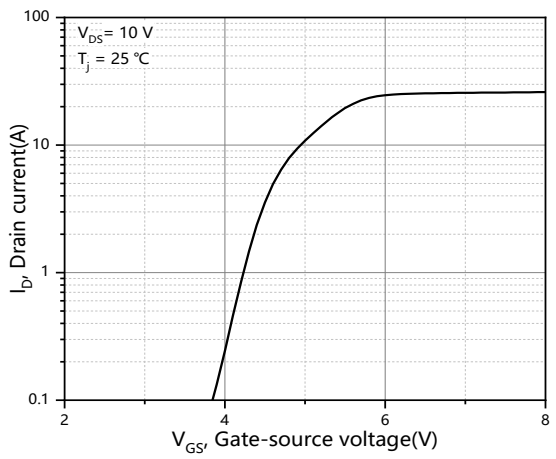

Figure 2. Typ. transfer characteristics

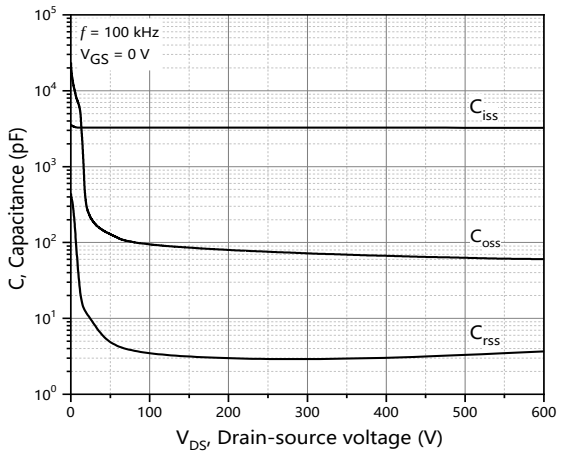

Figure 3. Typ. capacitances

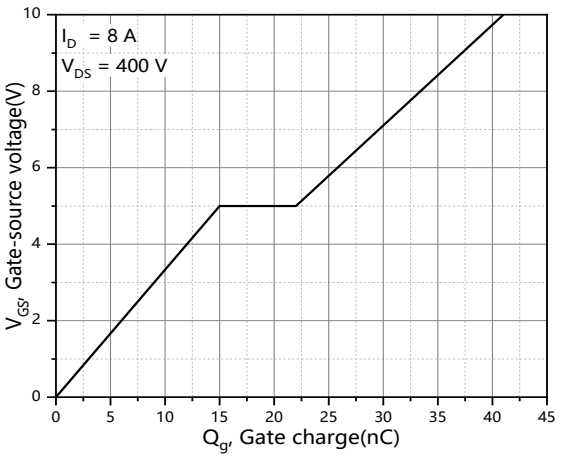

Figure 4. Typ. gate charge

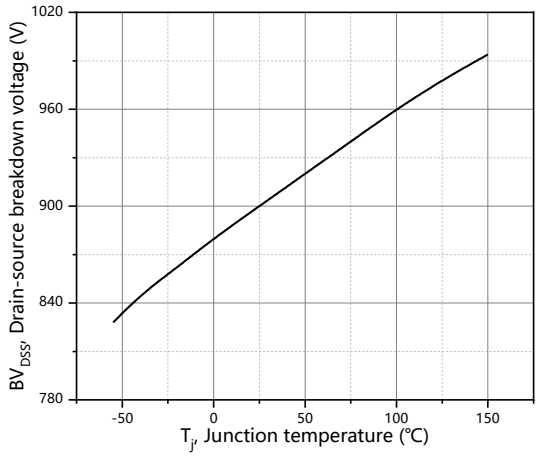

Figure 5. Drain-source breakdown voltage

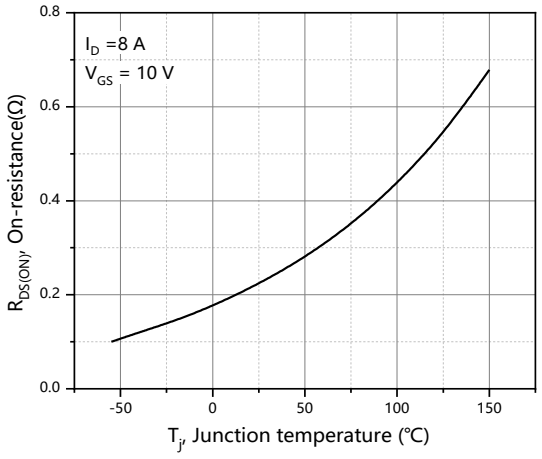

Figure 6. Drain-source on-state resistance

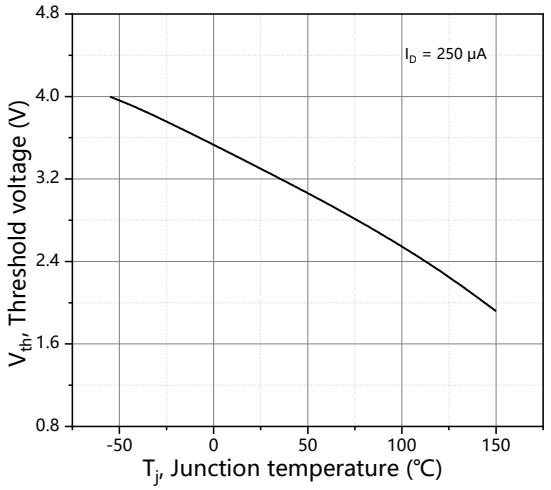

Figure 7. Threshold voltage

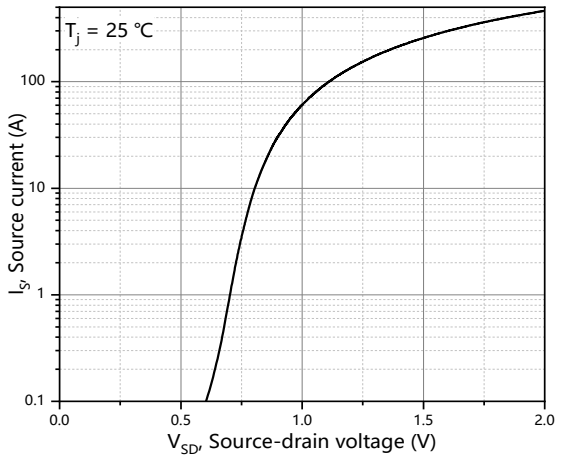

Figure 8. Forward characteristic of body diode

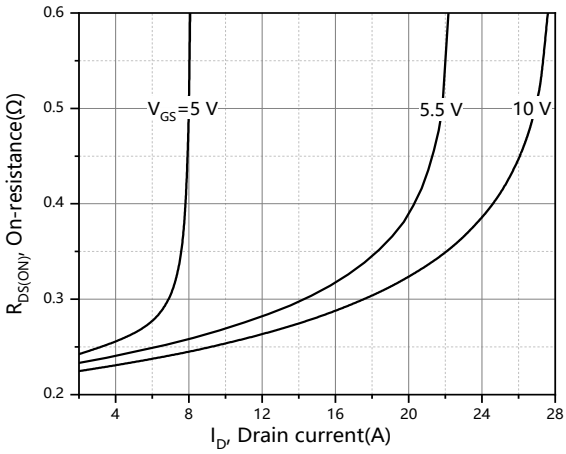

Figure 9. Drain-source on-state resistance

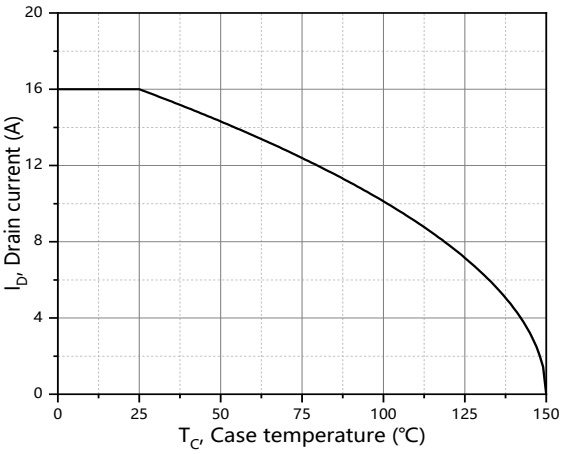

Figure 10. Drain current

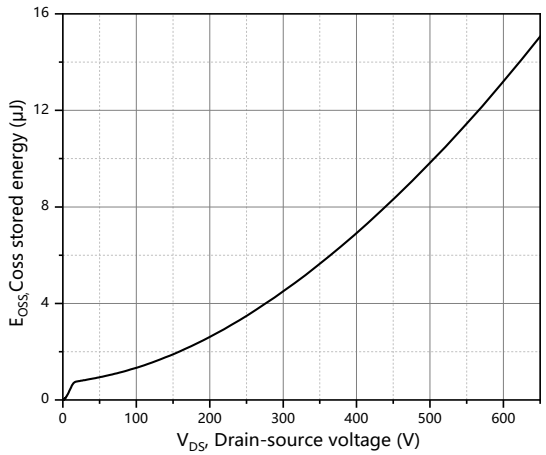

Figure 11. Typ. Coss stored energy

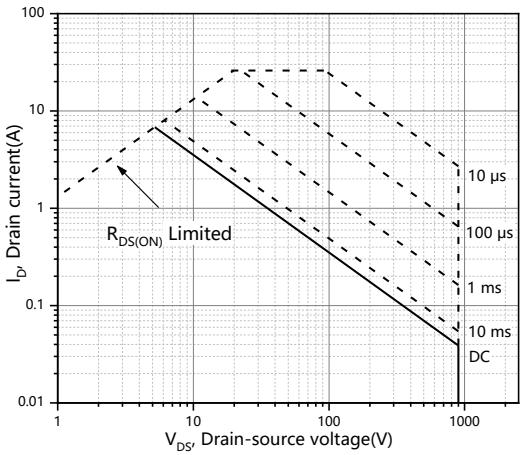

Figure 12. Safe operation area for Tc=25℃

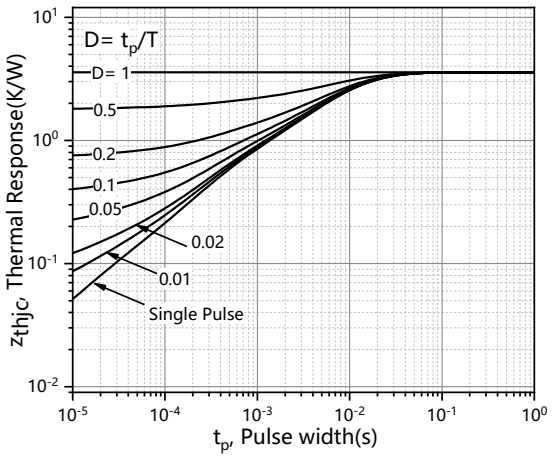

Figure 13. Max transient thermal impedance

Test circuits and waveforms

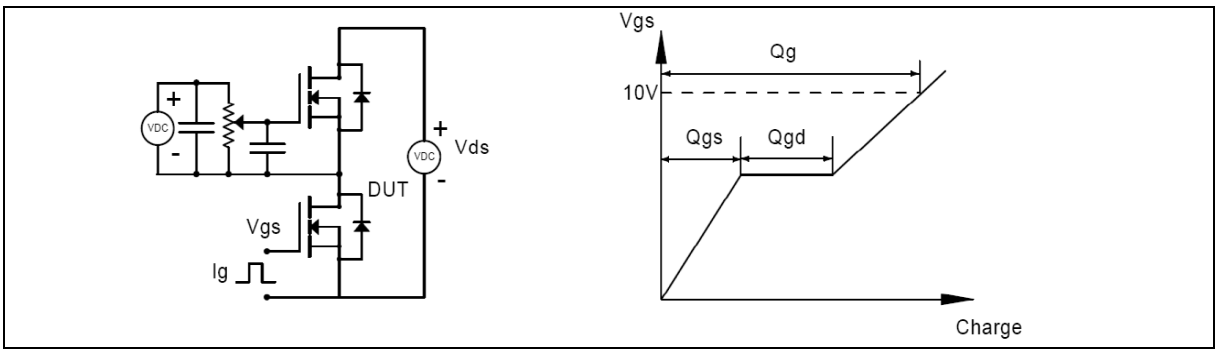

Figure 1. Gate charge test circuit & waveform

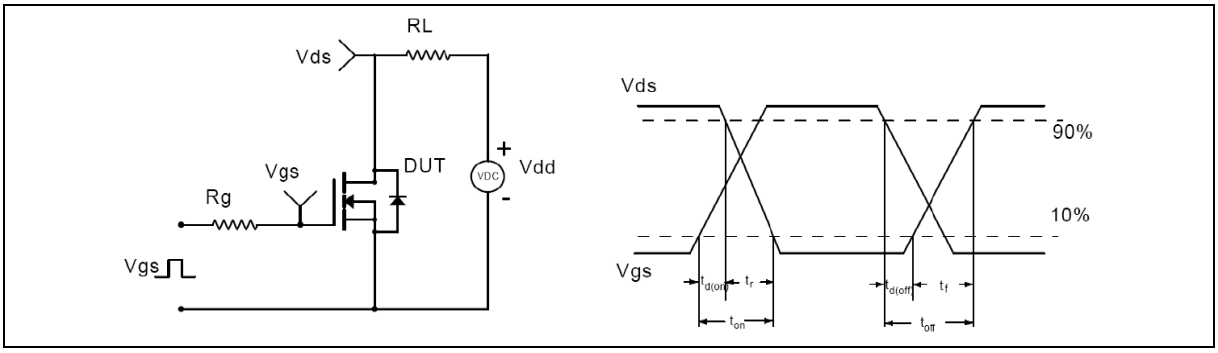

Figure 2. Switching time test circuit & waveforms

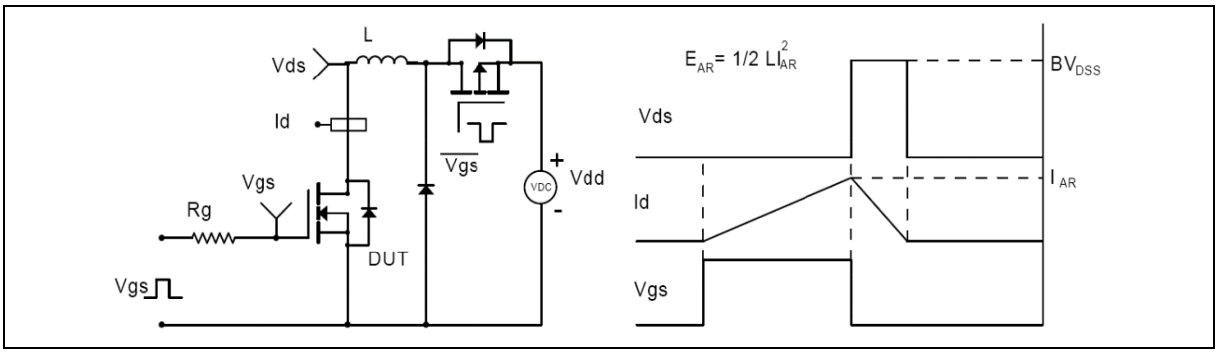

Figure 3. Unclamped inductive switching (UIS) test circuit & waveforms

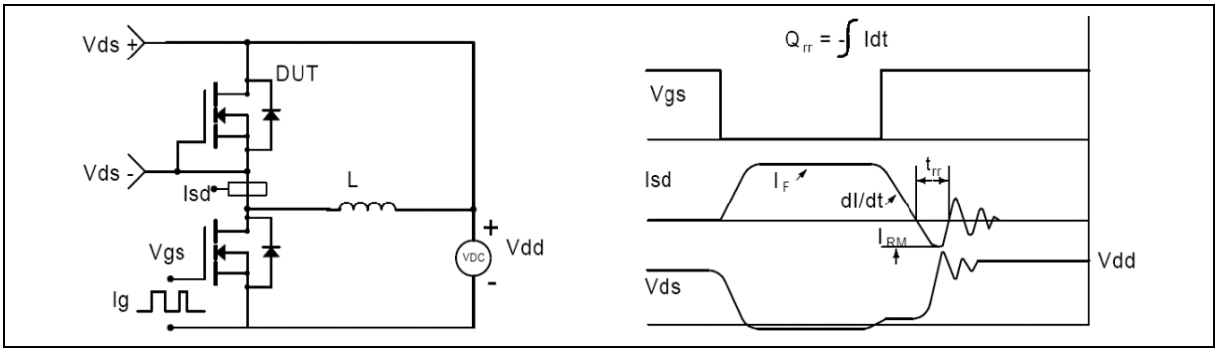

Figure 4. Diode reverse recovery test circuit & waveforms

Package Information

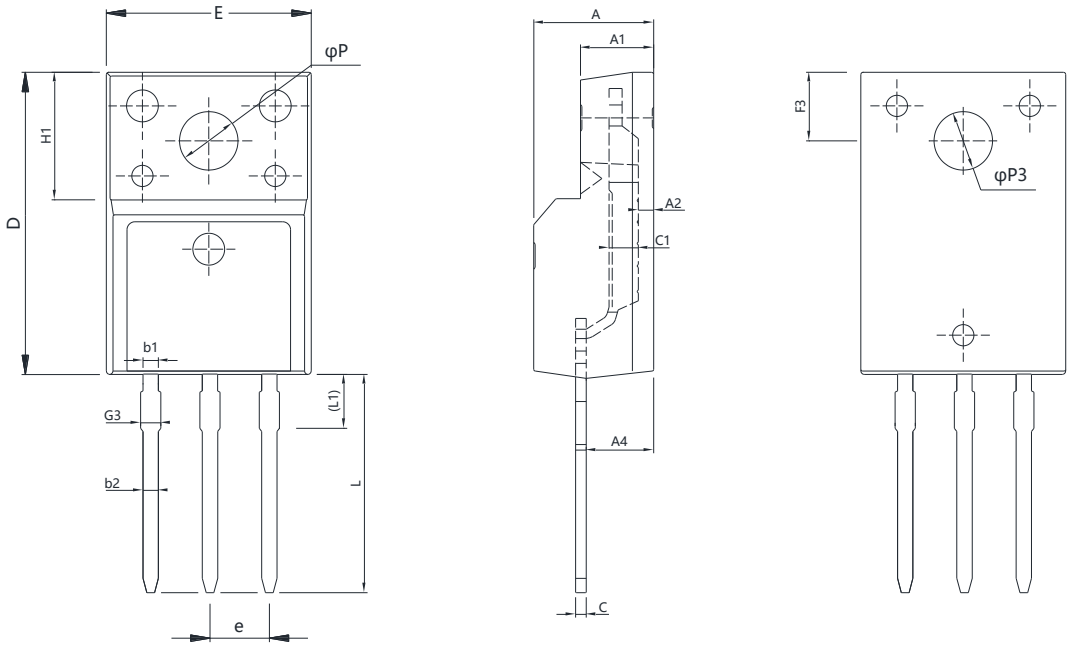

Symbol	mm		
	Min	Nom	Max
E	9.96	10.16	10.36
A	4.50	4.70	4.90
A1	2.34	2.54	2.74
A4	2.56	2.76	2.96
c	0.40	0.50	0.65
D	15.57	15.87	16.17
H1	6.70 REF		
e	2.54 BSC		
L	12.68	12.98	13.28
L1	2.88	3.03	3.18
ΦP	3.03	3.18	3.38
ΦP3	3.15	3.45	3.65
F3	3.15	3.30	3.45
G3	1.25	1.35	1.55
b1	1.18	1.28	1.43
b2	0.70	0.80	0.95

Version 1: TO220F-P package outline dimension

Ordering Information

Package Type	Units/ Tube	Tubes/ Inner Box	Units/ Inner Box	Inner Boxes/ Carton Box	Units/ Carton Box
TO220F-P	50	20	1000	6	6000

Product Information

Product	Package	Pb Free	RoHS	Halogen Free
OSG90R250FF	TO220	yes	yes	yes

Legal Disclaimer

The information given in this document shall in no event be regarded as a guarantee of conditions or characteristics. With respect to any examples or hints given herein, any typical values stated herein and/or any information regarding the application of the device, Oriental Semiconductor hereby disclaims any and all warranties and liabilities of any kind, including without limitation, warranties of non-infringement of intellectual property rights of any third party.

For further information on technology, delivery terms and conditions and prices, please contact the Oriental Semiconductor sales representatives (www.orientalsemi.com).

ORIENTAL SEMICONDUCTOR

A Power Semiconductor Innovator