General Description

FSMOS® MOSFET is based on Oriental Semiconductor's unique device design to achieve low $R_{DS(ON)}$, low gate charge, fast switching and excellent avalanche characteristics. The high V_{th} series is specially designed to use in motor control systems with driving voltage of more than 10V.

Features

- Low $R_{DS(ON)}$ & FOM
- Extremely low switching loss
- Excellent reliability and uniformity
- Fast switching and soft recovery

Applications

- PD charger
- Motor driver
- Switching voltage regulator
- DC-DC convertor
- Switching mode power supply

Key Performance Parameters

Parameter	Value	Unit
V_{DS}	100	V
$I_{D,\ pulse}$	1200	A
$R_{DS(ON),\ max}$ @ V_{GS}=10V	1.3	mΩ
Q_g	151.5	nC

Marking Information

Product Name	Package	Marking
SFS10R013UTNF	TOLL	SFS10R013UTN

Package & Pin information

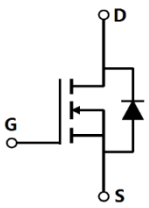

Absolute Maximum Ratings at T_j=25°C unless otherwise noted

Parameter	Symbol	Value	Unit
Drain-source voltage	V_{DS}	100	V
Gate-source voltage	V_{GS}	±20	V
Continuous drain current[1], T_C=25 °C	I_D	400	A
Pulsed drain current[2], T_C=25 °C	$I_{D, pulse}$	1200	A
Continuous diode forward current[1], T_C=25 °C	I_S	400	A
Diode pulsed current[2], T_C=25 °C	$I_{S, pulse}$	1200	A
Power dissipation[3], T_C=25 °C	P_D	650	W
Single pulsed avalanche energy[5]	E_{AS}	540	mJ
Operation and storage temperature	T_{stg}, T_j	-55 to 175	°C

Thermal Characteristics

Parameter	Symbol	Value	Unit
Thermal resistance, junction-case	$R_{\theta JC}$	0.23	°C/W
Thermal resistance, junction-ambient[4]	$R_{\theta JA}$	62	°C/W

Electrical Characteristics at T_j=25°C unless otherwise specified

Parameter	Symbol	Min.	Typ.	Max.	Unit	Test condition
Drain-source breakdown voltage	BV_{DSS}	100			V	V_{GS}=0 V, I_D=250 μA
Gate threshold voltage	$V_{GS(th)}$	2		4	V	V_{DS}=V_{GS}, I_D=250 μA
Drain-source on-state resistance	$R_{DS(ON)}$		1.05	1.3	mΩ	V_{GS}=10 V, I_D=15 A
Gate-source leakage current	I_{GSS}			100	nA	V_{GS}=20 V
				-100		V_{GS}=-20 V
Drain-source leakage current	I_{DSS}			1	μA	V_{DS}=100 V, V_{GS}=0 V
Gate resistance	R_G		0.98		Ω	f=1 MHz, Open drain

Oriental Semiconductor © Copyright Reserved V1.0

Dynamic Characteristics

Parameter	Symbol	Min.	Typ.	Max.	Unit	Test condition
Input capacitance	C_{iss}		9950		pF	V_{GS}=0 V, V_{DS}=25 V, f=100 kHz
Output capacitance	C_{oss}		5510		pF	
Reverse transfer capacitance	C_{rss}		379		pF	
Turn-on delay time	$t_{d(on)}$		25		ns	V_{GS}=10 V, V_{DS}=50 V, R_G=2 Ω, I_D=25 A
Rise time	t_r		23		ns	
Turn-off delay time	$t_{d(off)}$		65		ns	
Fall time	t_f		30		ns	

Gate Charge Characteristics

Parameter	Symbol	Min.	Typ.	Max.	Unit	Test condition
Total gate charge	Q_g		151.5		nC	V_{GS}=10 V, V_{DS}=50 V, I_D=25 A
Gate-source charge	Q_{gs}		33.5		nC	
Gate-drain charge	Q_{gd}		33.7		nC	
Gate plateau voltage	$V_{plateau}$		3.7		V	

Body Diode Characteristics

Parameter	Symbol	Min.	Typ.	Max.	Unit	Test condition
Diode forward voltage	V_{SD}			1.3	V	I_S=30 A, V_{GS}=0 V
Reverse recovery time	t_{rr}		112		ns	V_R=50 V, I_S=25 A, di/dt=100 A/μs
Reverse recovery charge	Q_{rr}		329		nC	
Peak reverse recovery current	I_{rrm}		4.8		A	

Note

1) Calculated continuous current based on maximum allowable junction temperature.
2) Repetitive rating; pulse width limited by max. junction temperature.
3) Pd is based on max. junction temperature, using junction-case thermal resistance.
4) The value of $R_{\theta JA}$ is measured with the device mounted on 1 in^2 FR-4 board with 2oz. Copper, in a still air environment with T_a=25 °C.
5) V_{DD}=50V,V_{GS}=10 V, L=0.3 mH, starting T_j=25 °C.

Oriental Semiconductor © Copyright Reserved V1.0

Electrical Characteristics Diagrams

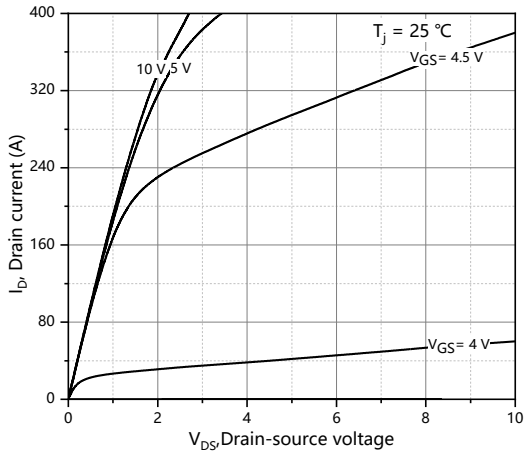

Figure 1. Typ. output characteristics

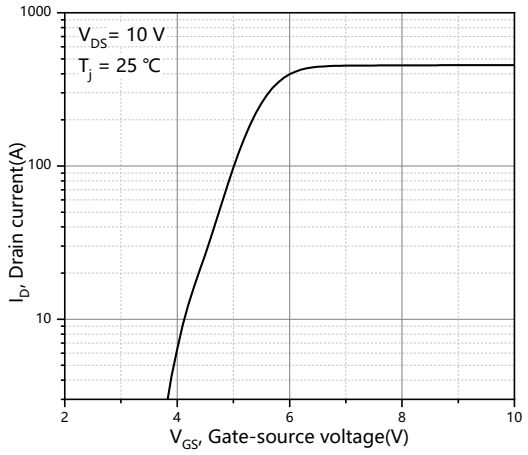

Figure 2. Typ. transfer characteristics

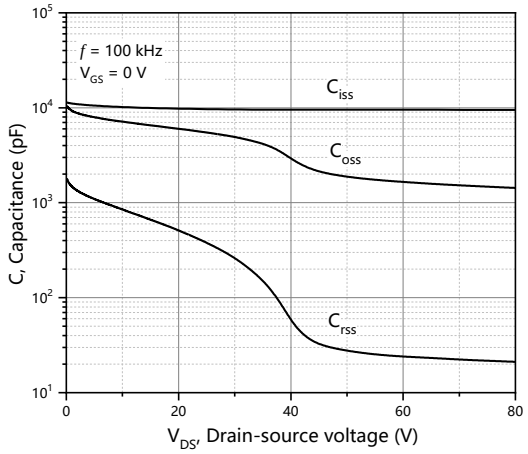

Figure 3. Typ. capacitances

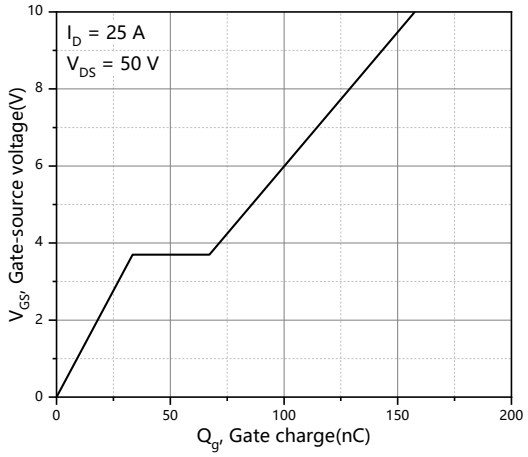

Figure 4. Typ. gate charge

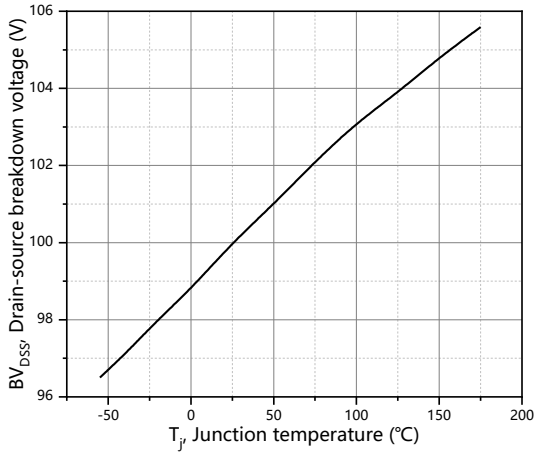

Figure 5. Drain-source breakdown voltage

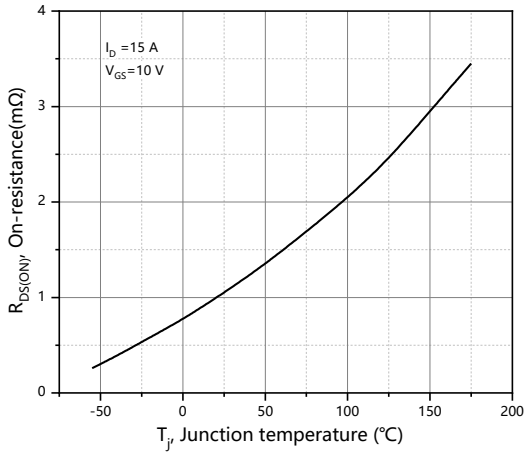

Figure 6. Drain-source on-state resistance

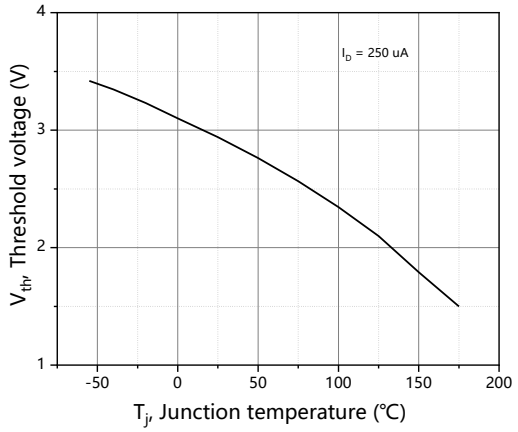

Figure 7. Threshold voltage

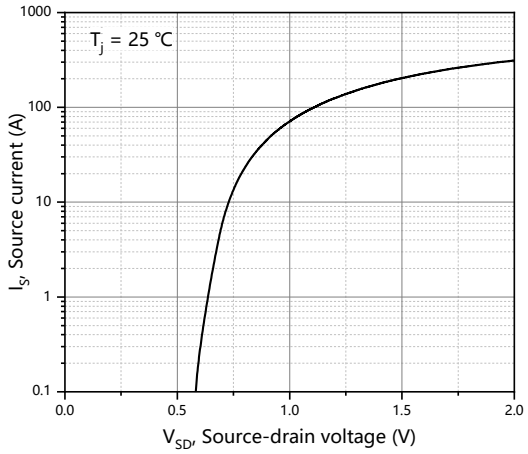

Figure 8. Forward characteristic of body diode

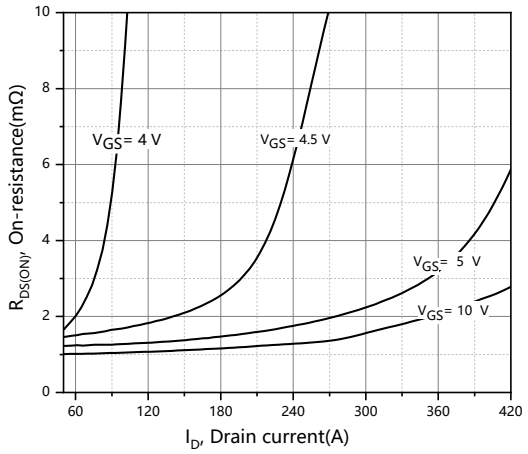

Figure 9. Drain-source on-state resistance

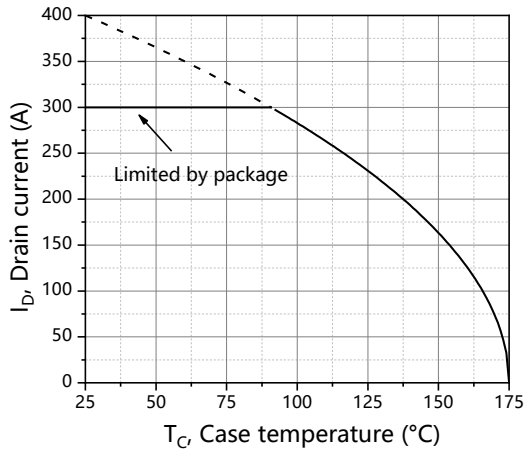

Figure 10. Drain current

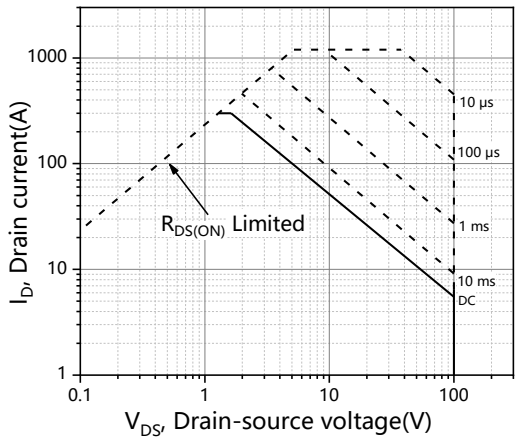

Figure 11. Safe operation area T_C=25℃

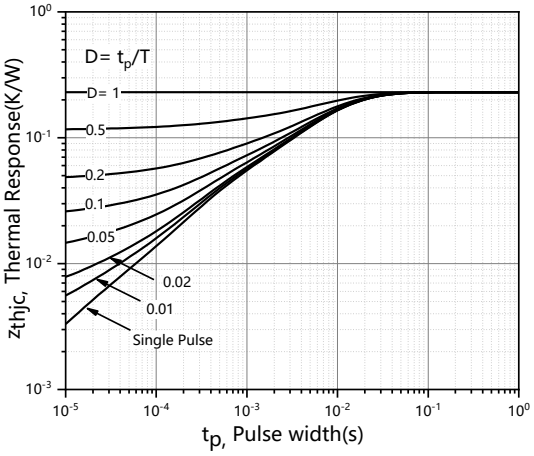

Figure 12. Max. transient thermal impedance

Test circuits and waveforms

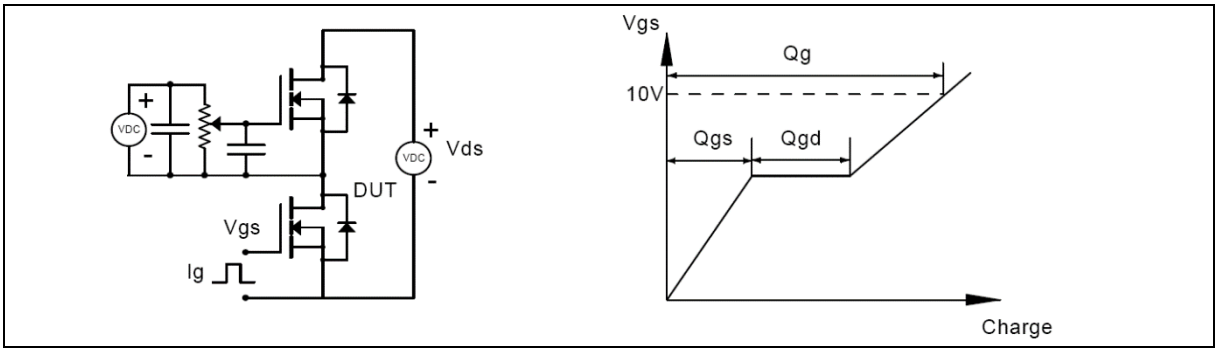

Figure 1. Gate charge test circuit & waveform

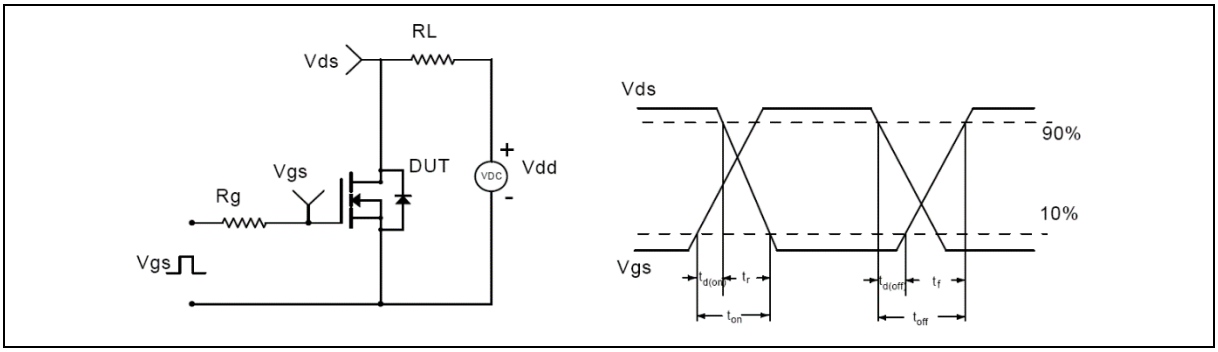

Figure 2. Switching time test circuit & waveforms

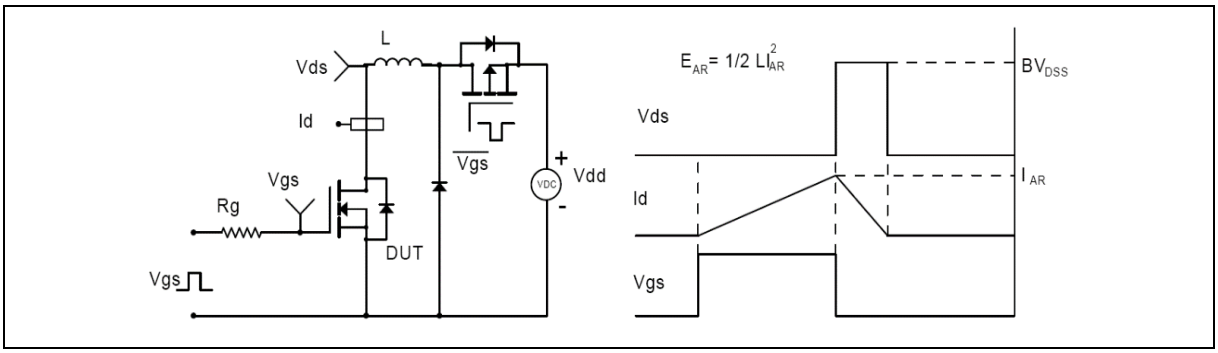

Figure 3. Unclamped inductive switching (UIS) test circuit & waveforms

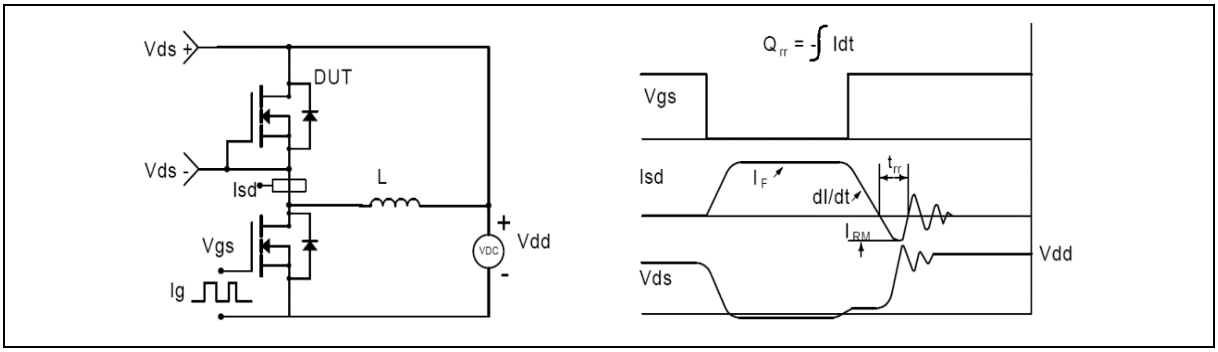

Figure 4. Diode reverse recovery test circuit & waveforms

Package Information

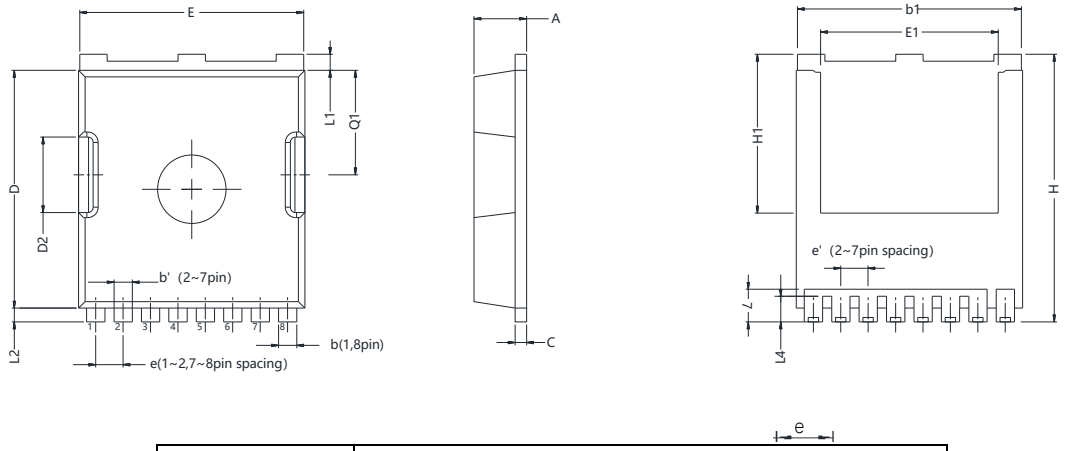

Symbol	mm		
	Min	Nom	Max
A	2.15	2.30	2.45
b	0.75	0.75	0.85
b'	0.70	0.70	0.80
b1	9.65	9.80	9.95
C	0.45	0.50	0.60
D	10.18	10.38	10.58
D2	3.15	3.30	3.45
E	9.70	9.90	10.10
E1	7.95	8.10	8.25
e	BSC 1.225		
e'	BSC 1.20		
Q1	4.40	4.55	4.70
H	11.48	11.68	11.88
H1	6.80	6.95	7.10
L	1.60	1.80	2.00
L1	0.50	0.70	0.90
L2	0.48	0.60	0.72
L4	1.00	1.15	1.30

Version 1: TOLL-P package outline dimension

Oriental Semiconductor © Copyright Reserved V1.0

Ordering Information

Package Type	Units/ Reel	Reels / Inner Box	Units/ Inner Box	Inner Boxes/ Carton Box	Units/ Carton Box
TOLL-P	1200	1	1200	5	6000

Product Information

Product	Package	Pb Free	RoHS	Halogen Free
SFS10R013UTNF	TOLL	yes	yes	yes

Legal Disclaimer

The information given in this document shall in no event be regarded as a guarantee of conditions or characteristics. With respect to any examples or hints given herein, any typical values stated herein and/or any information regarding the application of the device, Oriental Semiconductor hereby disclaims any and all warranties and liabilities of any kind, including without limitation, warranties of non-infringement of intellectual property rights of any third party.

For further information on technology, delivery terms and conditions and prices, please contact the Oriental Semiconductor sales representatives (www.orientalsemi.com).

© Oriental Semiconductor Co.,Ltd. All Rights Reserved

ORIENTAL SEMICONDUCTOR

A Power Semiconductor Innovator