General Description

FSMOS® MOSFET is based on Oriental Semiconductor's unique device design to achieve low $R_{DS(ON)}$, low gate charge, fast switching and excellent avalanche characteristics. The high V_{th} series is specially designed to use in motor control systems with driving voltage of more than 10V.

Features

- Low $R_{DS(ON)}$ & FOM
- Extremely low switching loss
- Excellent reliability and uniformity
- Fast switching and soft recovery

Applications

- PD charger
- Motor driver
- Switching voltage regulator
- DC-DC convertor
- Switching mode power supply

Key Performance Parameters

Parameter	Value	Unit
V_{DS}	100	V
$I_{D,\ pulse}$	280	A
$R_{DS(ON),\ max}$ @ V_{GS}=10V	12	mΩ
Q_g	22	nC

Marking Information

Product Name	Package	Marking
SFS10R12UGNF	PDFN5×6	SFS10R12UGN

Package & Pin information

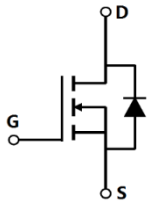

Absolute Maximum Ratings at T_j=25°C unless otherwise noted

Parameter	Symbol	Value	Unit
Drain-source voltage	V_{DS}	100	V
Gate-source voltage	V_{GS}	±20	V
Continuous drain current[1], T_C=25 °C	I_D	70	A
Pulsed drain current[2], T_C=25 °C	$I_{D, pulse}$	280	A
Continuous diode forward current[1], T_C=25 °C	I_S	70	A
Diode pulsed current[2], T_C=25 °C	$I_{S, pulse}$	280	A
Power dissipation[3], T_C=25 °C	P_D	45	W
Single pulsed avalanche energy[5]	E_{AS}	38	mJ
Operation and storage temperature	T_{stg}, T_j	-55 to 175	°C

Thermal Characteristics

Parameter	Symbol	Value	Unit
Thermal resistance, junction-case	$R_{\theta JC}$	3.33	°C/W
Thermal resistance, junction-ambient[4]	$R_{\theta JA}$	62	°C/W

Electrical Characteristics at T_j=25°C unless otherwise specified

Parameter	Symbol	Min.	Typ.	Max.	Unit	Test condition
Drain-source breakdown voltage	BV_{DSS}	100			V	V_{GS}=0 V, I_D=250 μA
Gate threshold voltage	$V_{GS(th)}$	2		4	V	V_{DS}=V_{GS}, I_D=250 μA
Drain-source on-state resistance	$R_{DS(ON)}$		10	12	mΩ	V_{GS}=10 V, I_D=33A
Gate-source leakage current	I_{GSS}			100	nA	V_{GS}=20 V
				-100		V_{GS}=-20 V
Drain-source leakage current	I_{DSS}			1	μA	V_{DS}=100 V, V_{GS}=0 V
Gate resistance	R_G		0.6		Ω	f=1 MHz, Open drain

Dynamic Characteristics

Parameter	Symbol	Min.	Typ.	Max.	Unit	Test condition
Input capacitance	C_{iss}		1360		pF	V_{GS}=0 V, V_{DS}=25 V, f=100 kHz
Output capacitance	C_{oss}		631		pF	
Reverse transfer capacitance	C_{rss}		51		pF	
Turn-on delay time	$t_{d(on)}$		9		ns	V_{GS}=10 V, V_{DS}=50V, R_G=2 Ω, I_D=25 A
Rise time	t_r		3.6		ns	
Turn-off delay time	$t_{d(off)}$		20		ns	
Fall time	t_f		3.9		ns	

Gate Charge Characteristics

Parameter	Symbol	Min.	Typ.	Max.	Unit	Test condition
Total gate charge	Q_g		22		nC	V_{GS}=10 V, V_{DS}=50 V, I_D=25 A
Gate-source charge	Q_{gs}		3.8		nC	
Gate-drain charge	Q_{gd}		4.7		nC	
Gate plateau voltage	$V_{plateau}$		3.4		V	

Body Diode Characteristics

Parameter	Symbol	Min.	Typ.	Max.	Unit	Test condition
Diode forward voltage	V_{SD}			1.3	V	I_S=20A, V_{GS}=0 V
Reverse recovery time	t_{rr}		54		ns	V_R=50 V, I_S=25 A, di/dt=100 A/μs
Reverse recovery charge	Q_{rr}		77		nC	
Peak reverse recovery current	I_{rrm}		2.4		A	

Note

1) Calculated continuous current based on maximum allowable junction temperature.
2) Repetitive rating; pulse width limited by max. junction temperature.
3) Pd is based on max. junction temperature, using junction-case thermal resistance.
4) The value of $R_{\theta JA}$ is measured with the device mounted on 1 in^2 FR-4 board with 2oz. Copper, in a still air environment with T_a=25 °C.
5) V_{DD}=30 V,V_{GS}=10 V, L=0.3 mH, starting T_j=25 °C.

Electrical Characteristics Diagrams

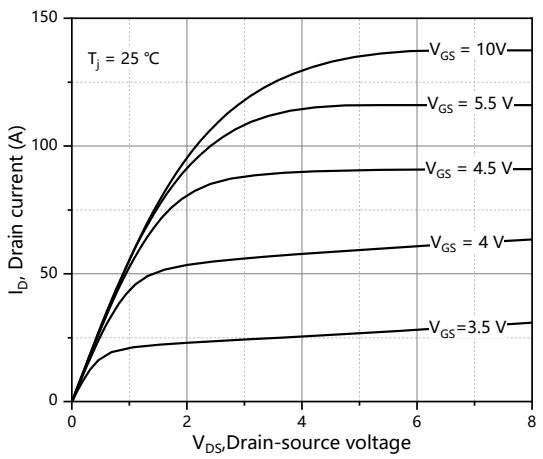

Figure 1. Typ. output characteristics

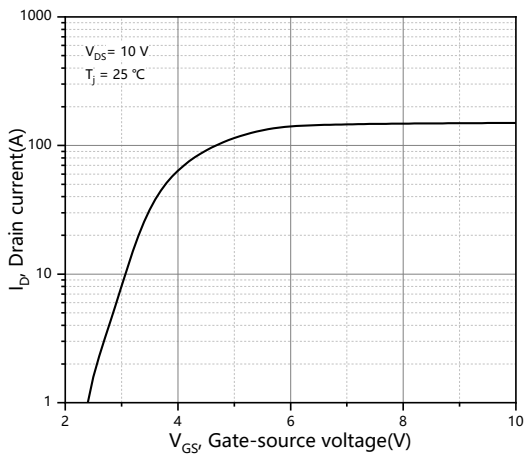

Figure 2. Typ. transfer characteristics

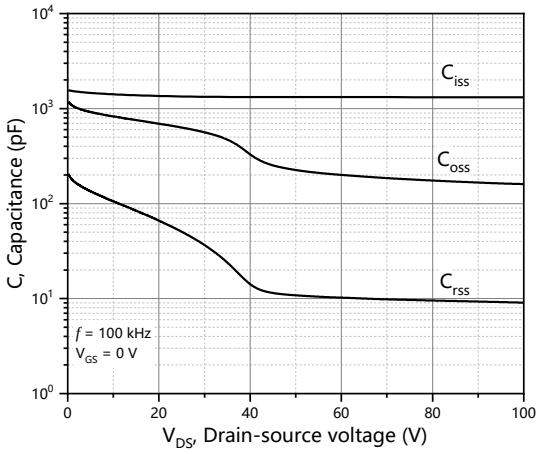

Figure 3. Typ. capacitances

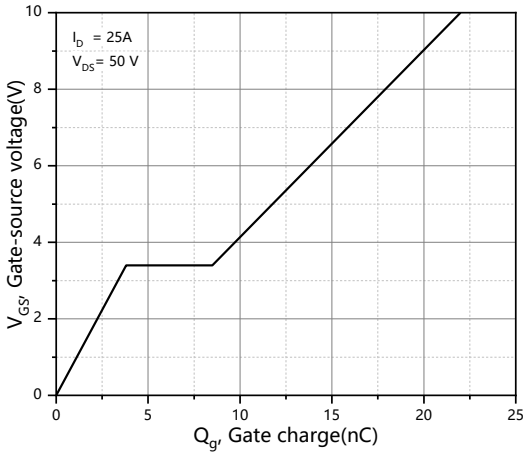

Figure 4. Typ. gate charge

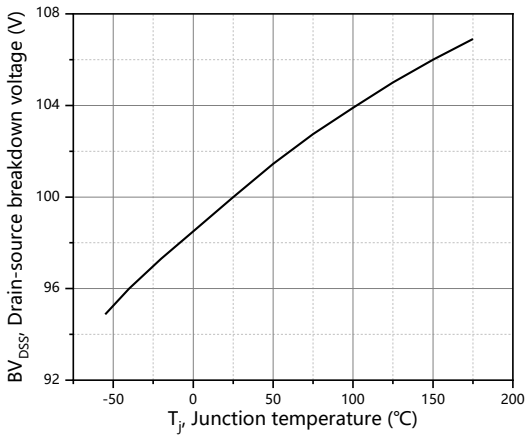

Figure 5. Drain-source breakdown voltage

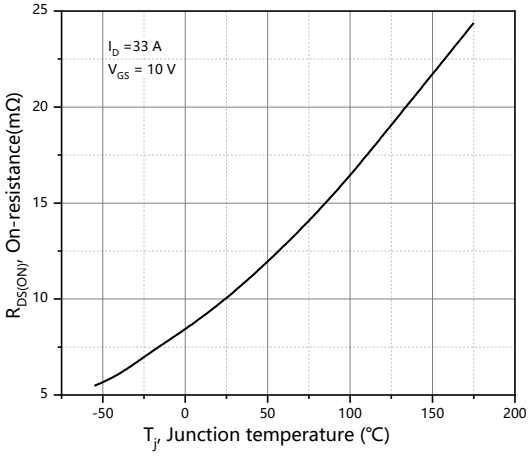

Figure 6. Drain-source on-state resistance

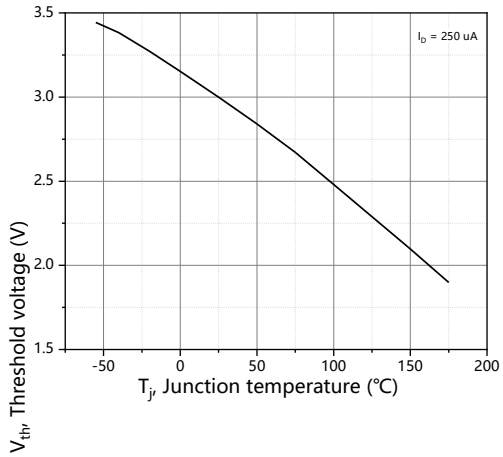

Figure 7. Threshold voltage

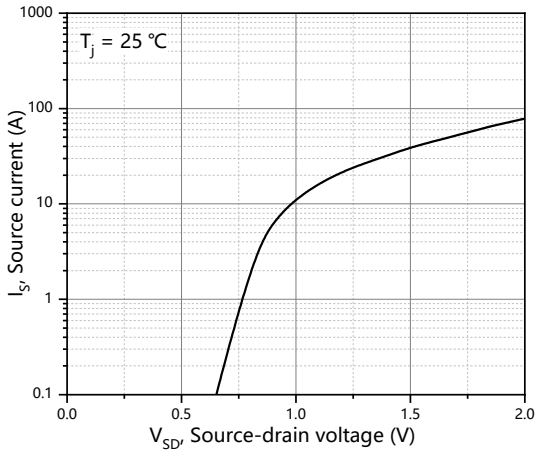

Figure 8. Forward characteristic of body diode

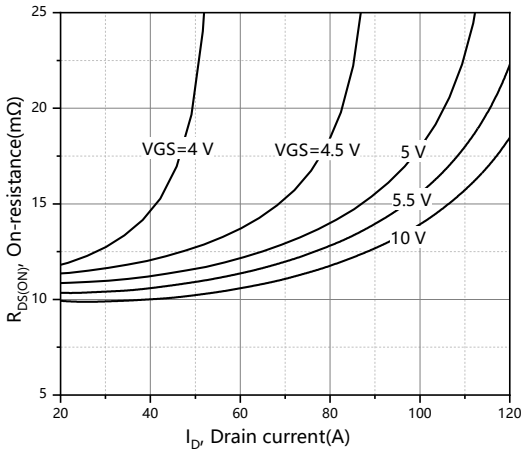

Figure 9. Drain-source on-state resistance

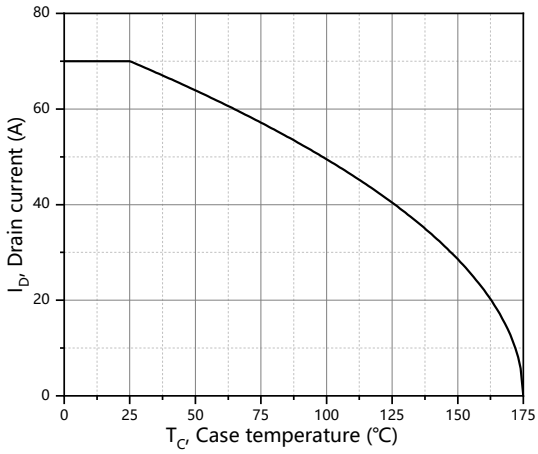

Figure 10. Drain current

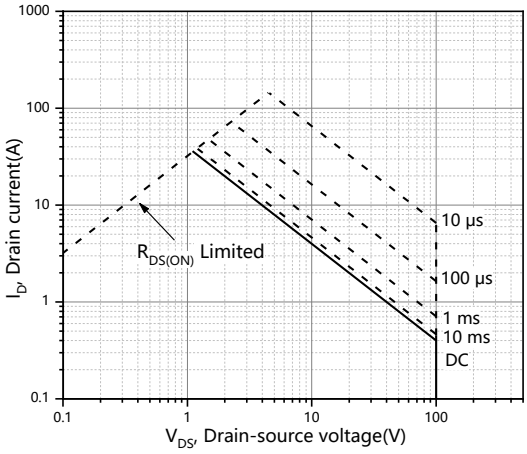

Figure 11. Safe operation area T_C=25℃

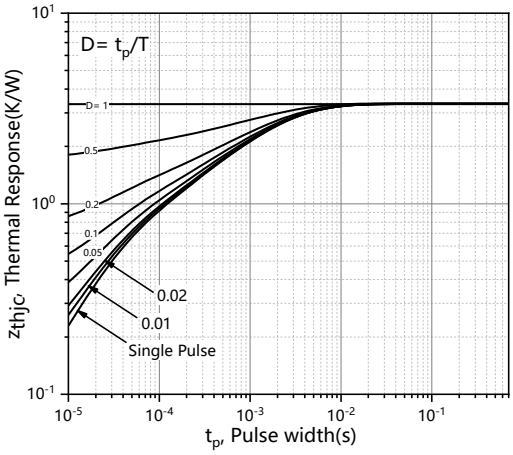

Figure 12. Max. transient thermal impedance

Test circuits and waveforms

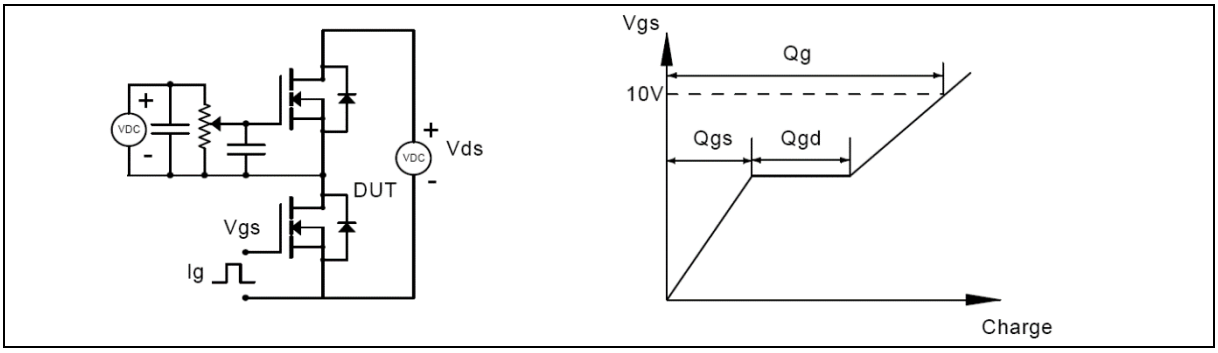

Figure 1. Gate charge test circuit & waveform

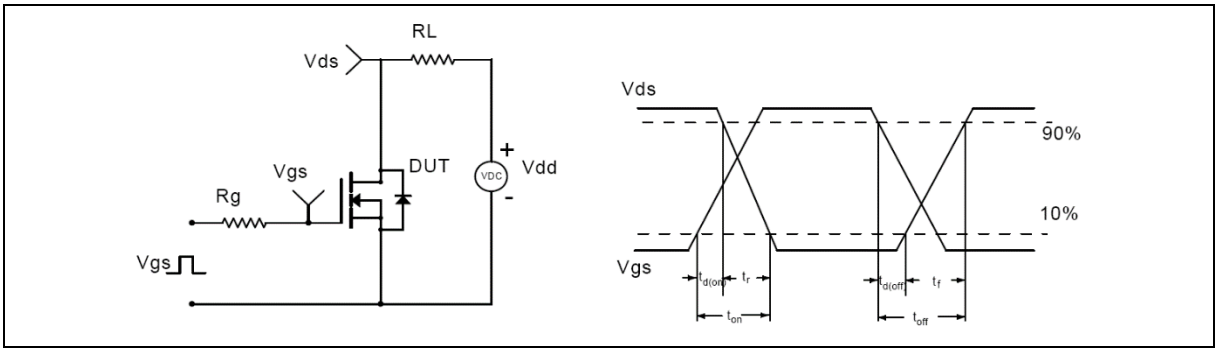

Figure 2. Switching time test circuit & waveforms

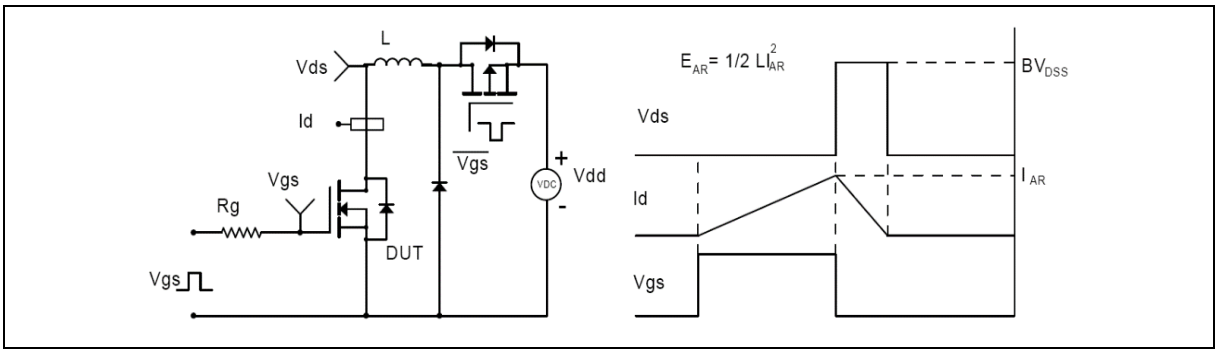

Figure 3. Unclamped inductive switching (UIS) test circuit & waveforms

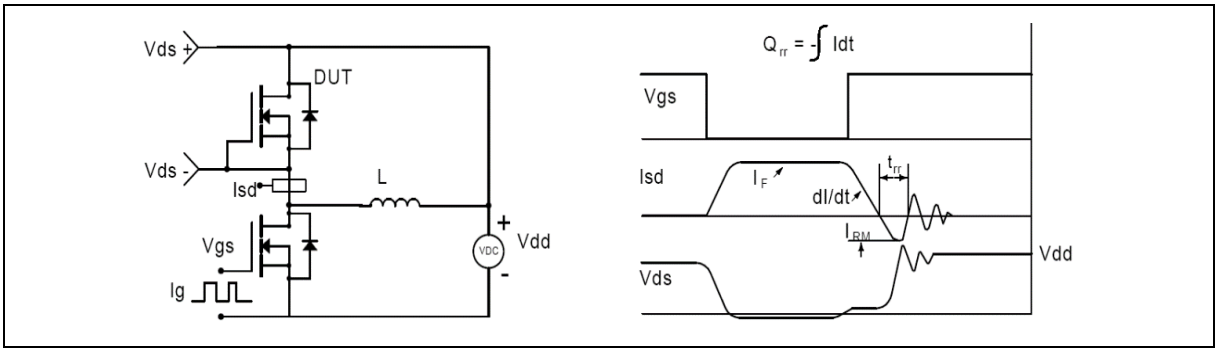

Figure 4. Diode reverse recovery test circuit & waveforms

Package Information

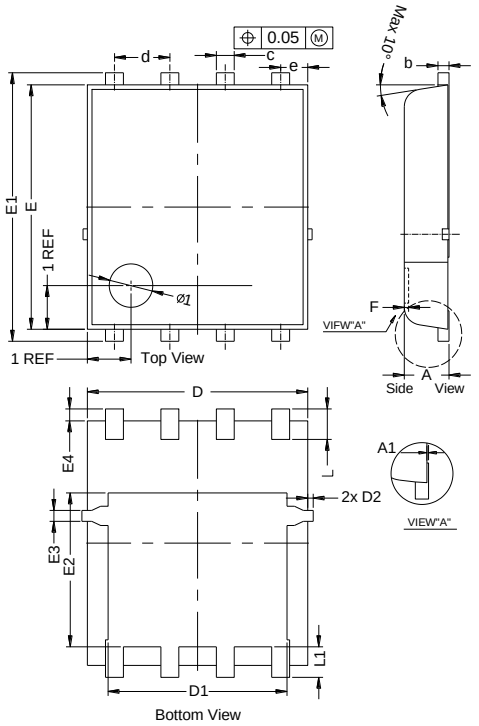

Symbol	mm		
	Min	Nom	Max
A	0.90	1.00	1.10
A1	0.00	-	0.05
b	0.246	0.254	0.312
c	0.31	0.41	0.51
d	1.27 BSC		
D	4.95	5.05	5.15
D1	4.00	4.10	4.20
D2	-	-	0.125
e	0.62 BSC		
E	5.50	5.60	5.70
E1	6.05	6.15	6.25
E2	3.425	3.525	3.625
E3	0.15	0.25	0.35
E4	0.175	0.275	0.375
F	-	-	0.10
L	0.50	0.60	0.70
L1	0.60	0.70	0.80
K	1.125	1.225	1.325

Version 1: PDFN5×6-H package outline dimension

Ordering Information

Package Type	Units/ Reel	Reels/ Inner Box	Units/ Inner Box	Inner Boxes/ Carton Box	Units/ Carton Box
PDFN5×6	5000	2	10000	5	50000

Product Information

Product	Package	Pb Free	RoHS	Halogen Free
SFS10R12UGNF	PDFN5×6	yes	yes	yes

Legal Disclaimer

The information given in this document shall in no event be regarded as a guarantee of conditions or characteristics. With respect to any examples or hints given herein, any typical values stated herein and/or any information regarding the application of the device, Oriental Semiconductor hereby disclaims any and all warranties and liabilities of any kind, including without limitation, warranties of non-infringement of intellectual property rights of any third party.

For further information on technology, delivery terms and conditions and prices, please contact the Oriental Semiconductor sales representatives (www.orientalsemi.com).

ORIENTAL SEMICONDUCTOR

A Power Semiconductor Innovator