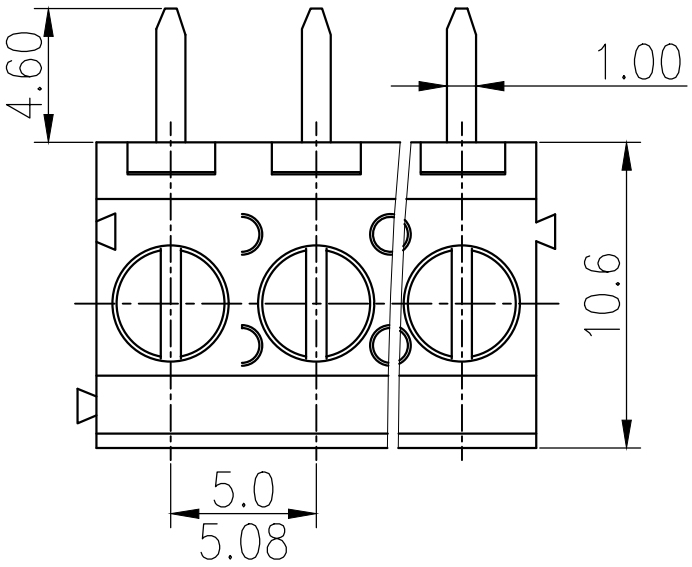
4.60
1.00
10.6
5.0
5.08

PCB LAYOUT

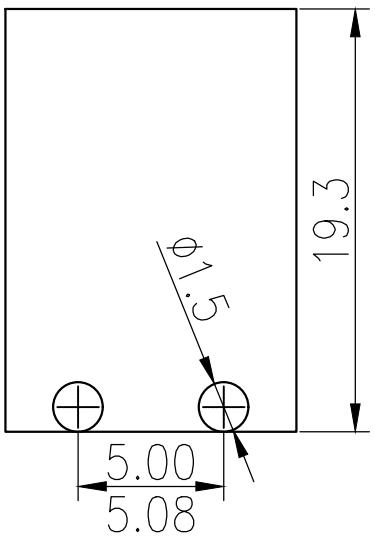
19.3
φ1.5
5.00
5.08

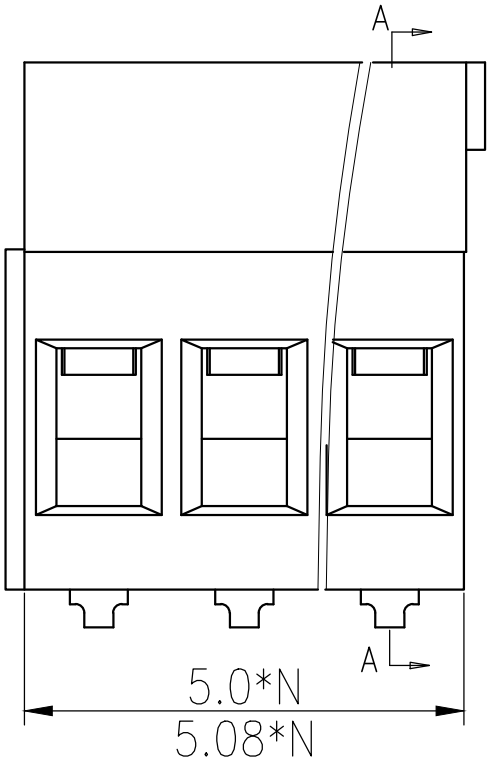
A
A
5.0*N
5.08*N

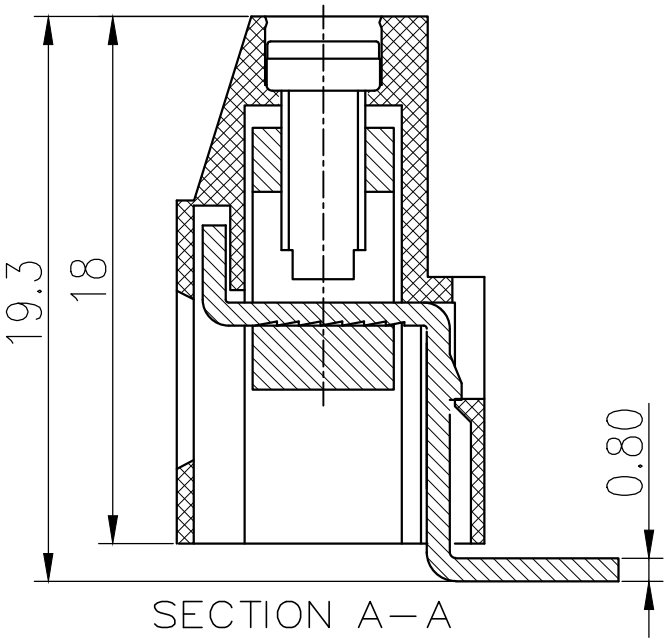
19.3
18
0.80
SECTION A—A