Constant Voltage Driver 恒压型 LED 驱动器

Model 型号: KAEW150S00XXNM30

Model 型号	Rated Input Voltage 额定输入电压范围	Rated Output Power① 输出功率		Rated Output Voltage 输出电压	Output② Voltage Adjustment Range 输出电压可调范围	Output Current 输出电流	Typical③ Efficiency 典型效率	Certification 证书
		100-120Vac	120-240Vac 125-328Vdc					
KAEW150S0024NM30	100~240 Vac	120 W	151.2 W	24V	22-26.4V	0-6.3A	93%	CE,TUV, CCC,SAA
KAEW150S0036NM30				36V	33-39.6V	0-4.2A		
KAEW150S0048NM30				48V	44-52.8V	0-3.15A		

NOTE:

① Refer to the Input Voltage vs. Load Derating curve for details /参考输入电压-负载曲线图。

②Setting different Output Voltage by adjustable resistor/rotary（Optional） /通过电位器调节不同的输出电压(选配)。

③ Test condition: 230Vac/50Hz, Rated Load, refer to Efficiency vs. Load curve for details /测试条件：230Vac/50Hz，额定负载，参考效率-负载曲线图。

1. Parameters 参数表

Category 类别	Item 项目	Technical Norm 技术指标
Features 特性	Output Type 输出类型	Constant Voltage Type 恒压型
	IP Grade 防护等级	IP67
	Insulation Class 绝缘等级	Class I
	Installation 安装方式	Independent 独立安装
Input 输入	Rated Input Voltage 额定输入电压范围	100~240Vac or 125V-328Vdc
	Operating Input Voltage 输入电压范围	90~305Vac or 125V-420Vdc
	Input Frequency 输入频率	Rated 50/60Hz, operating 47~63Hz
	Power Factor 功率因数	>0.95@Full Load >0.9@70-100%Load, refer to PF vs. Load curve
	THD 总谐波失真	<10%@115Vac/230Vac 70%-100%Load <15%@277Vac 70%-100%Load, refer to THD vs. Load curve
	Input Current 输入电流	≤1.6A@120Vac & Full-Load ≤0.8A@230Vac & Full-Load ≤0.7A@277Vac & Full-Load

	Leakage Current 漏电流	<0.75mA @277Vac 60Hz,<0.7mA@240Vac 50Hz, IEC61347-1
	Input Under/Over Voltage 输入过压欠压保护	No damage of wrong mains voltage: 0V AC to 340V AC, 10minutes maximum
	No Load Power 空载损耗	<0.5W
	Lightning Surge 雷击	6KV line-line; 6KV line-earth
Output 输出	Voltage Accuracy 电压精度	±2%
	Ripple Voltage 纹波电压	<1%Vo, (Vmax-Vmin)/(Vmax+Vmin)
	Line Regulation 线性调整率	±1%
	Load Regulation 负载调整率	±2%
	PstLM 频闪	≤1.0
	SVM 频闪效应	≤0.4
	Overshoot 过冲	Constant voltage type <105%Vo
	Start-up Time 启动延迟时间	<0.5S @115/230Vac
	Hold up Time 关机保持时间	10mS typical @ 230VAC
	Efficiency 效率	≥89%, 91% typical @120Vac, refer to Efficiency vs. Load curve ≥91%, 93% typical @230Vac, refer to Efficiency vs. Load curve
Protection 保护特性	Short Circuit 短路保护	Hiccup, Auto recovery. The output recovers when short circuit is removed
	Over Current 过电流保护	Hiccup, 120%~160% Io, Auto recovery
	Over Voltage 过电压保护	Hiccup, 110%~150% Vo, Auto recovery
	Over Temperature 过温度保护	Hiccup, 90℃<Tc<110℃, Auto recovery
	Insulation Voltage	3.75KVac/5mA/60S Primary to Secondary
		1.5KVac/5mA/60S Primary to Earth
	Insulation resistance	>100M ohm @ 500Vdc Primary to Earth
Environment 环境特性	OperatingAmbientTemperature 可操作环境范围	-40℃~+50℃, 10%RH~100%RH, Rated Load ; +50℃~+70℃, 10%RH~100%RH, refer to Ambient Temperature vs. Load Derating curve
	Storage Temperature 存储温度范围	-40℃～+85℃; 5%RH～100%RH
	Operating Case Temperature for Safety 安规壳温范围	-40℃～+90℃; 5%RH～100%RH
	Operating Case Temperature for Warranty 质保壳温范围	-40℃～+75℃; Case temperature for 5 years warranty. Humidity: 10% RH to 100% RH.
Standards 标准	Certification 证书	CE,TUV,CCC,SAA
	Safety Standards 安全规范标准	EN 61347-1:2015/A1:2021,EN61347-2-13:2014/A1:2017 EN62493:2015,AS61347.2.13:2018,GB 17625.1-2012, AS/NZS 61347.1:2016 Inc A1,GB 19510.1-2009, GB 19510.14-2009
	EMC Standards 电磁兼容标准	EN IEC 55015:2019,EN IEC 55015:2019/A11:2020, EN IEC 61000-3-2:2019/A1:2021,EN61547:2009, EN61000-3-3:2013/A2:2021,GB/T 17743-2021
	Performance 性能标准	EN62384
Others 其它	MTBF 平均无故障时间	≥250 Khours, ≤75℃ case temperature (MIL-HDBK-217F)

	Lifetime 寿命		≥90,000 hours, ≤75℃ case temperature, refer to life vs. Tc curve(End of Life: Maximum Failure Rate=10%)
	Dimensions 尺寸		7.60x2.09x1.24 by inch (body), 8.46x2.09x1.24 by inch (endcaps included)
			193x53x31.5 by mm (body), 215x53x31.5 by mm (endcaps included)
	Net Weight 净重		610±10g/PC
	Wiring 线材	Input 输入	CCC/VDE: H05RN-F/3X1.0mm2,Brown/Blue/(Yellow/Green) UL: SJTW/3X18AWG,Black/White
		Output 输出	CCC/VDE: H05RN-F/2X1.0mm2,Brown/Blue, UL: SJTW/2X18AWG,Black/White

Notes 备注:

1. Unless specified, all the test results are measured in 25℃ room temperature. 所有参数无特别说明，均在输入电压 230VAC/50Hz 和 25℃的环境温度下测得。
2. Output ripple should be measured at the output end which has with 0.1uF/100V ceramic capacitance and 10uF/100V Aluminum capacitance connected in parallel. Measured using oscilloscope with bandwidth limited to 20MHz. 输出纹波测试：在输出端并联 0.1uF /100 V 陶瓷电容和 10uF/100 V 铝电解电容，示波器用 20 MHz 带宽测量。

2. Connected quantities of different current Breaker 不同电流断路器的连接数量

TYPE 类型	Connected quantities of different current Breaker 不同电流断路器的连接数量						Input Voltage 输入电压	Inrush Current 浪涌电流	Time 时间
	current（A）	10	13	16	20	25			
	Installation wire diameter安装线径	1.5mm²	2.5mm²	2.5mm²	4mm²	4mm²			
TYPE B		11	14	18	22	28	@230VAC	54	296us
TYPE C		18	23	28	36	44			
TYPE D		28	37	46	57	71			

3. Label 铭牌

4. Lifetime vs. Case Temperature 寿命-温度曲线

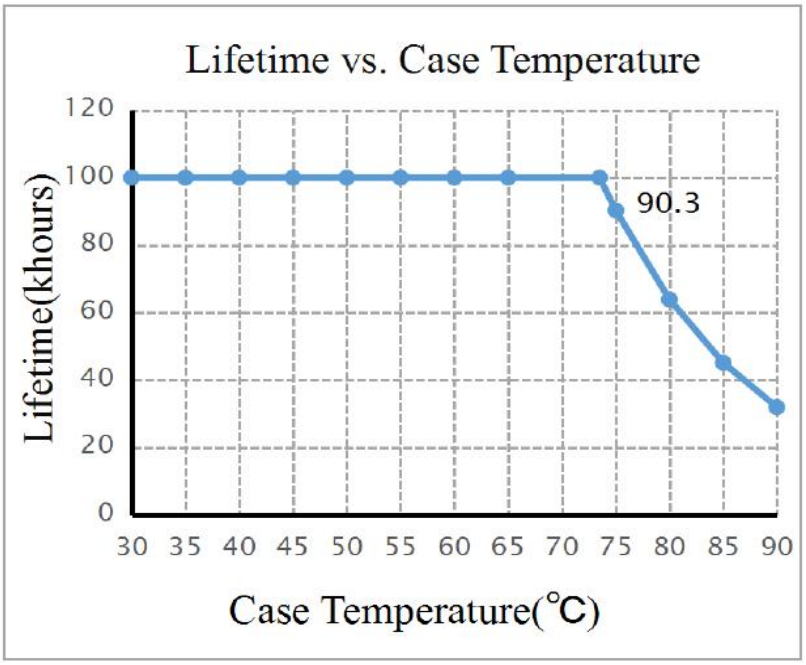

5. Power Factor, THD and Efficiency vs. Load

功率因数-负载，总谐波失真-负载，效率-负载曲线

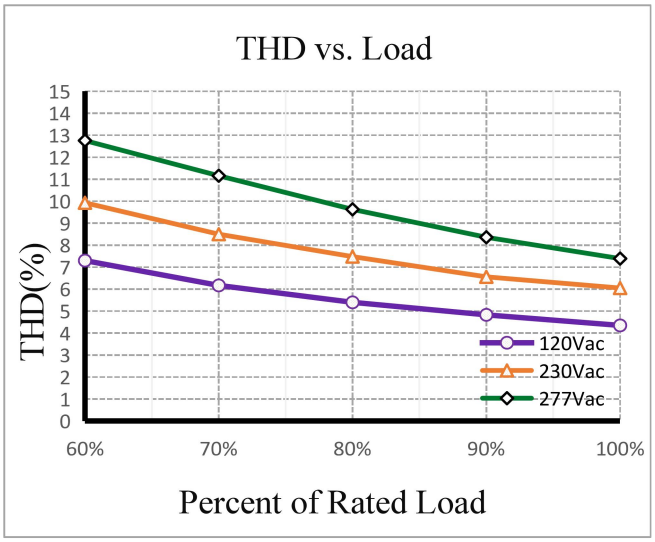

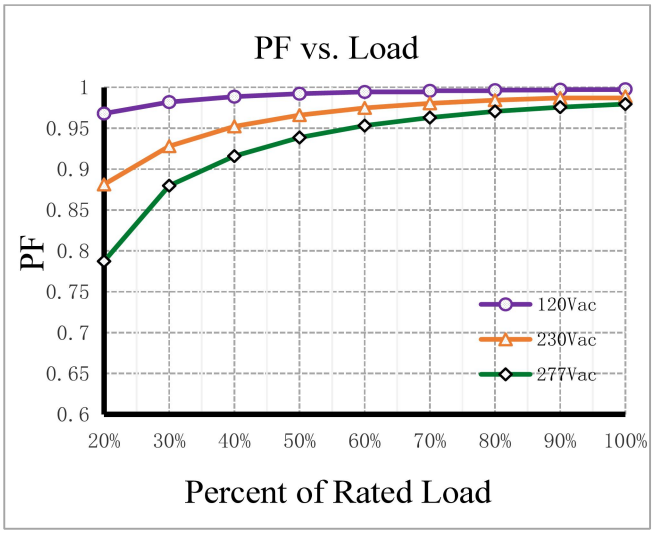

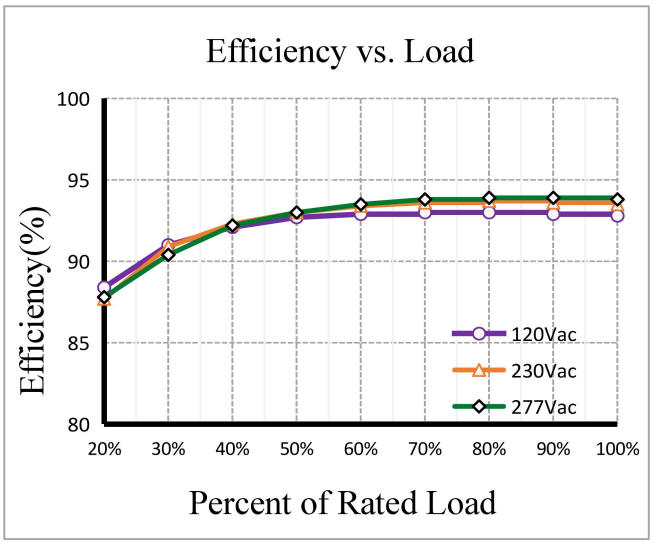

6. Input Voltage and Temperature vs. Load Derating 输入电压-负载,温度-负载曲线

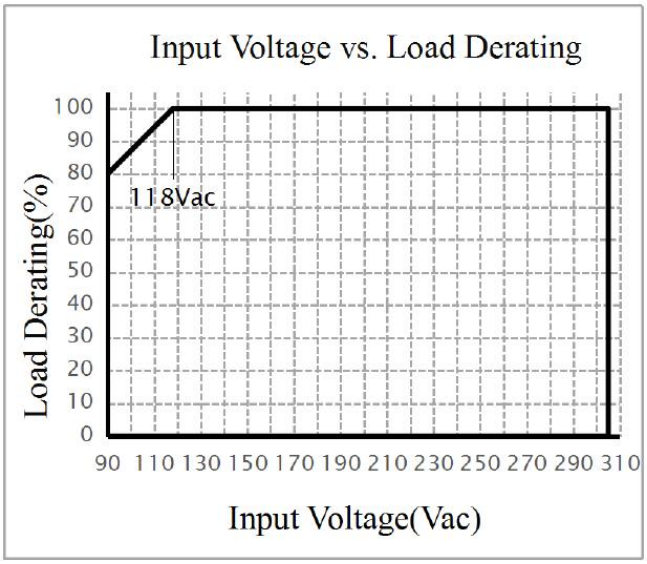

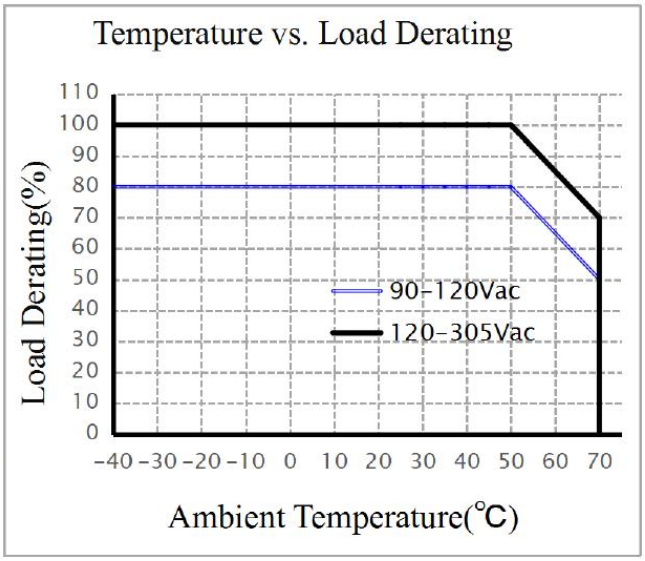

7. Packing information

Carton L*W*H(mm)	Pcs/Carton	Net weight/ Pcs(kg)	Net weight/ Carton(kg)	Gross weight / Carton(kg)
420X240X200mm	15Pcs	0.61kg	9.15kg	10.4kg

8.Mechanical Design 机械设计

- **UL Cable**

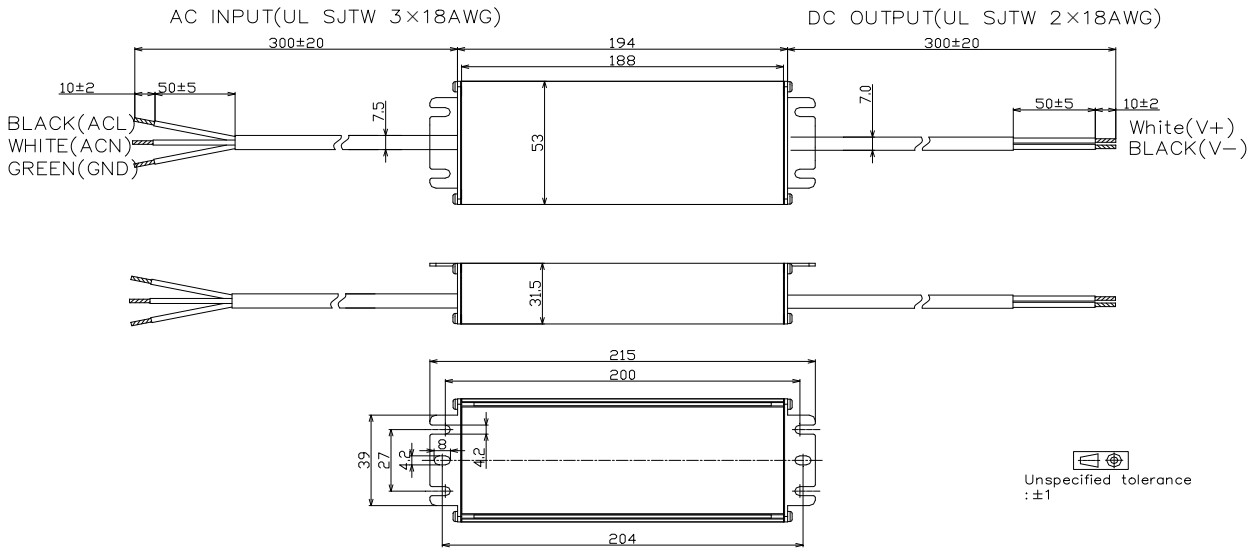

- **CCC/VDE Cable**

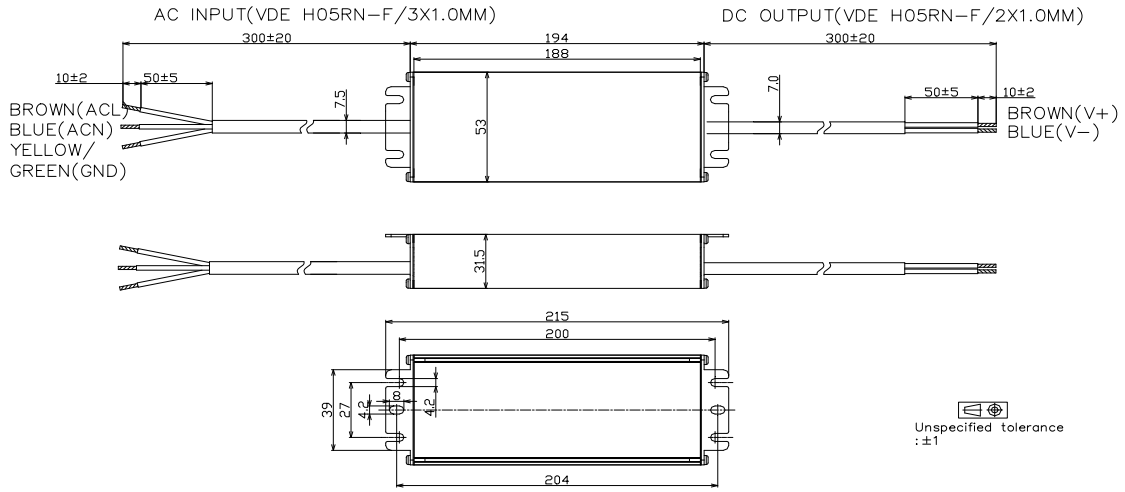

9.Wiring instructions 接线说明

• All connections must be kept as short as possible to ensure good EMI behaviour
所有的连接线尽可能的短，以保证良好的 EMI
• Mains leads should be kept apart from LED Driver and other leads (ideally 5 – 10 cm distance)
电源线应和驱动器以及其他连接线保持一定的距离（建议 5-10cm）
• Advice the maximum length of output wires is 3 m
建议输出线的最大长度不超过 3m
• Incorrect wiring can damage LED modules.
错误的布线会损坏 LED 模组
• The wiring must be protected against short circuits to earth (sharp edged metals parts, metal cable clips, louver, etc.)
防止线路电线对地短路。（尖锐的金属零件、金属电缆夹、百叶窗等）

10.REVISION HISTORY 修订历史

DATE 日期	REV.版本	REMARK 备注
2019-11-05	V1.0	Initial release.首次发行。
2021-08-10	V1.1	Adjust the rated voltage range for the input（调整输入端的额定电压范围）
2022-06-02	V1.2	Add circuit breaker table （添加断路器表）
2022-10-15	V1.3	Update safety standards and EMC standards（更新安全标准和 EMC 标准）