635nm Red Laser Diode

■Specifications

(1) Device: Laser Diode

(2) Structure: TO-18(ϕ 5.6mm),With Pb free glass cap, PD

■External dimensions(Unit : mm)

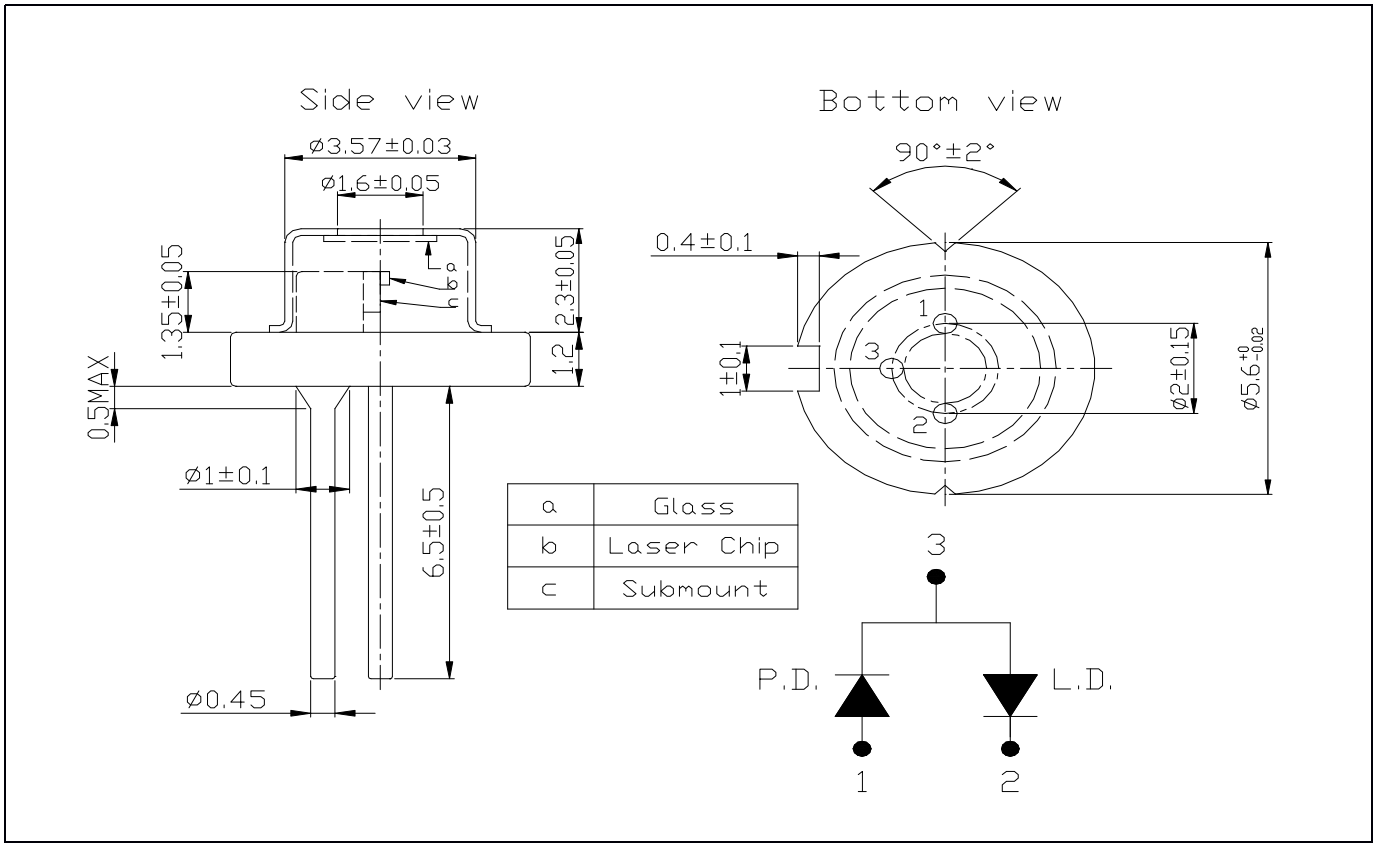

■Absolute Maximum Ratings(Tc=25℃)

Parameter		Symbols	Value	Units
Optical Output		Po	**12**	mW
Reverse Voltage	Laser	Vr	**2**	V
	PIN PD	Vr(PIN)	**30**	V
Operating Temperature		Top	-10～+40	℃
Storage Temperature		Tstg	-40～+85	℃

■Electrical and Optical Characteristics(Tc=25℃)

Parameter		Symbols	Conditions	Min.	Typ.	Max.	Units
		Ith		-	**30**	**40**	mA
Operating Current		Iop	Po=10mW	-	**45**	**60**	mA
Operating Voltage		Vop	-	-	**2.2**	**2.6**	Volts
Slope Efficiency		η	7mW-3mW / I_{7mW}-I_{3mW}	**0.3**	**0.6**	-	mW/mA
Monitor Current		Im	Po=10mW	**0.05**	**0.15**	**0.4**	mA
Beam Divergence (FWHM)	Parallel	θ //	Po=10mW	**6**	**8**	**12**	deg.
	Perpendicular	θ ⊥	Po=10mW	**28**	**33**	**37**	deg.
Lasing Wavelength		λ	Po=10mW	**630**	**638**	**642**	nm

◎ θ // and θ ⊥ are defined as the angle within which the intensity is 50% of the peak value.

■Typical characteristic curves