ETONE
易田股份

产品目录
ETONE CATALOGUE

浙江易田精工机械股份有限公司
Zhejiang Etone Precision Machinery Co., Ltd.

ETONE

浙江易田精工机械股份有限公司

Add: 宁波市鄞州区鄞州经济开发区听海南路327号
(No.327 South of Tinghai Road, Yinzhou Economic
Development Zone, Yinzhou Distrist, Ningbo, China)
Tel:+86-574-86198812 +86-574-86198845
Fax:+86-574-86198900
E-mail:sales@china-etone.com

www.china-etone.com

售后热线：+86-574-86198845

公司简介 ETONE COMPANY PROFILE

浙江易田精工机械股份有限公司(ETONE)为国内大型高速高精密冲压设备专业制造商,坐落于沿海开放城市-中国宁波，成立于2018年7月,由原宁波市泰易达精密机械有限公司和宁波市西田精工机械有限公司吸收组建而成,注册资金6150万元,总投资4亿多元,总占地面积79500平方米。

我司拥有全套精密数控加工设备，多项精密检测仪器,全面通过了1S09001、ISO14001.ISO45001三大体系认证，并实现了ERP、CRM、MES等企业信息化工程。

我司主要生产15T-1000T各规格开式、闭式高精密冲床，其中APJ及APH系列60T-550T电机定转子冲压自动化生产线在国内市场占有率居行业前列。

凭借公司科学的品控体系和完善的服务，易田产品获得了国内外市场的广泛认可，与众多上市公司、行业龙头结成长期战略合作伙伴。

我们将继续秉持“积极、主动、上进、务实”的企业精神为更多的客户提供,创新稳定的产品,快捷优质的服务。

ZHEJIANG YITIAN PRECISION MACHINERY Co., LTD., (ETONE) is a large-scaled mechanical power press machine and high speed press machine manufacturer and turn-key project supplier. We are located in Ningbo, China. Our company was founded in July, 2018 (by merging of Ningbo Taiyida Precision machinery co., LTD.and the Ningbo XITIAN Seiko machinery co., LTD.,). Our registered capital is RMB 61.5 million yuan, total investment is RMB 0.4 billion. The floor space is 79,500 square meters.

We have a large number of precision CNC processing equipment and various of precision testing instruments. We are certified by ISO9001, ISO14001, and ISO45001. We implement ERP, PDM, CAM system in management.

Our company has professional know-how of the C-frame & H-frame high precision press machine, from 15 tons to 1000 tons. Among which, our motor core precision press machine series APJ and APH, ranging from 60T to 550T, has high market share in the industry.

With the company's scientific quality control system and perfect service, YITIAN products have gained wide recognition in domestic and foreign markets and formed long-term strategic partnerships with many listed companies and industry leaders.

We will always pursuit the company spirit as 'Positive, Progressive, Hard-working, Pragmatic' in order to provide advanced and durable machines and perfect service to our customers.

部分证书

ETONE CERTIFICATE

PAGE OF CONTENTS

目 录

01	5S管理装配现场 5S Management Assembly Site	P04
02	客户实际使用现场 Actual application site of the customer	P05
03	APA、APC、APD、APE、APF零件特征 Features of APA, APC, APD, APE, APF parts	P06-07
04	APJ系列龙门式高速精密四导柱冲床 APJ series gantry type high speed precision four-pillar press	P08-09
05	APH系列高速龙门冲床 APH series high speed gantry press	P10-11
06	APZ系列肘节式高速精密冲床 APZ series knuckle link type high speed recision press	P12-17
07	APA系列高精密强力钢架冲床 APA series high precision steel frame press	P18-21
08	APC系列双曲轴精密钢架冲床 APC series double: crankshaft precision steel frame press	P22-23
09	APD系列半闭式高精密强力钢架冲床 APD series semi-closed high precision steel frame press	P24-25
10	APE系列闭式门型双曲轴精密钢架冲床 APE series closed-door type double -Crankshaft precision steel frame press	P26-29
11	APF系列闭式单曲轴精密冲床 APF series close-type single crankshaft precision press machine	P30-31
12	STD系列直柱型双曲轴强力冲床 STD series straight pillar type double crankshaft powerful press	P32-33
13	APG系列闭式双点龙门冲床 APG series closed type double point gantry press	P34-35
14	EKT系列肘杆式冷温锻精密压力机 EKT series knuckle cold & warm forging press	P36-37
15	EFP系列热模锻精密压力机 EFP series new hot die forging press	P38-39

6S 管理装配现场

6S MANAGEMENT ASSEMBLY SITE

专业、研发、制造、销售、服务

Professionalism, R&D, manufacturing, sales, service

拥有多项质量管理体系认证

National High-Tech Enterprise

为了追求高精度的部件加工，我们使用世界一流的加工机械。

To enable high-precision parts processing, we apply world-class processing machinery.

SCENE

我们的 CUSTOMER

OUR CUSTOMERS

满足客户个性化需求

Satisfy individualized demands of the customers

此产品是我司针对高速精密冲床电控历经多年研发的一款专用控制系统，拥有多项发明专利，在冲床控制业界处于领先水平。

具有传统控制器不具备的多项功能，能够检测出冲床实际冲压压力，可以及时保护机器，保护模具，产品品质监测和无限联网等多项功能。

本控制系统能够使：冲床的安全性大大加强，能够大大提升冲床的精密度，大大改善冲压产品的品质，是真正高档次冲床的最佳伴侣。

比较传统PLC我司专用控制系统能够替代并多出以下重要功能：

The product is a special control system developed by the Company for high-speed precision press electric control. It is provided with a great number of invention patents and is taking the lead within the press control industry.

The product is provided with multiple functions that are not available in the traditional controllers, it can detect the actual punching pressure of the press, protect the machine in a timely manner, protect the die, enable product quality monitoring and unlimited net-working, etc.

The control system can greatly enhance the safety of the press, greatly improve the precision of the press, greatly improve the quality of the pressed products, and is an optimal product for high-grade presses.

Compared with traditional PLCs, the special control system of the Company can enable replacement with additional important functions as follows:

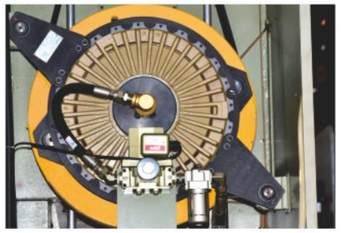

干式离合器
Dry clutch

齿轮（精密研磨加工）
Gear (precision grinding)

齿轮轴+曲轴（精密研磨加工）
Gear shaft + crankshaft
(precision grinding)

电控系统
Electronic control system

变频器
Frequency converter

日本品牌超负荷油泵
Overload oil pump
(Japanese brand)

日本品牌双联电磁阀
Double solenoid valve
(Japanese brand)

1) 专利证号: 201110134235.6
一种冲床的电子自动控制方法
2) 专利证号: 201120166259.5
一种冲床模高自动调整装置
3) 专利证号: 201120166268.4
一种冲床模具保护装置

1) Patent Certificate No.: 201110134235.6
Electronic automatic control method for presses
2) Patent Certificate No.: 201120166259.5
press die height automatic adjusting device
3) Patent Certificate No.: 201120166268.4
press die protection device

1)冲压实际吨位压力测量功能
2)机器最大吨位保护功能
3)模具压力超限保护功能
4)产品品质自动监测功能（下死点检知产品品质监测）
5)顶点停止自动校正功能
6)多机联网功能

1)Actual punching tonnage pressure measurement function
2)Maximum tonnage protection function
3)Die pressure over limit protection function
4)Automatic product quality monitoring function (detection of product quality at the bottom dead center)
5)Top stop automatic correction function
6)Multi-machine networking function

特别在动力传动扭矩的各个环节部件，我们赢得了质量精密的口碑。

Especially in various parts of the power transmission torque, we have won the reputation for excellent quality and precision.

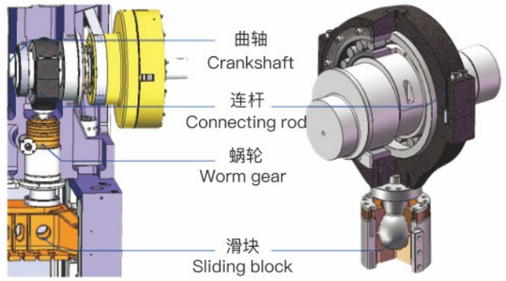

扭矩动力传达系统
Torque power transmission system

曲轴加工金刚钻再次精研磨

Crankshaft processing diamond drill repeated fine grinding

通过金刚钻的再次精磨来确保机械加工机以上的表面高精度[Rmax0.8S]

Guarantee high surface precision above the machine by repeated fine grinding of the diamond [Rmax0.8S]

以此来实现连接部份的最小间隙，实现综合间隙最小，来长时间的维持设备本身响高精度。

This aims to enable minimum gap of the connecting portions so as to further minimize the overall gap and maintain high precision of the device for a long period.

滑块连接部份的加工一抛光

Processing of the connecting part of the sliding block – polishing

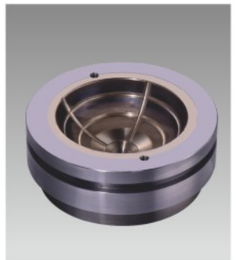

让球面与连接处进行研磨抛光处理，尽可能的减少设备初期使用时带来的磨损间隙

Grind and polish the spherical surface and the joint to minimize the wear gap caused by the initial use of the equipment

在同一台加工机上对螺杆和螺母进行加工，来实现螺纹之间的最小间隙从而保护设备的高精度。

Machine the screw and nut on the same processing device to minimize clearance between the threads so as to guarantee high precision of the equipment

60~500T
GANTRY TYPE HIGH SPEED PRECISION FOUR-PILLAR PRESS

APJ SERIES
龙门式高速精密四导柱冲床

高精度稳定性和可靠性

高钢合金铸造机架结构，（通过计算机解析设计出最适合机架）经过消除内应力工艺处理，进一步提高了对于精度不可缺少的高刚性机架，实现了低噪音和低振动化，提高模具使用寿命。

HIGH PRECISION STABILITY AND RELIABILITY

High steel alloy casting frame structure (with the most suitable for the frame designed by computer analysis), processed by the internal stress elimination process, further improving the high rigidity frame which is indispensable for precision, achieving low noise and low vibration, and improving service life of the die.

Technical parameters 技术参数

机型	Model	型号规格	APJ-60	APJ-80	APJ-125	APJ-150	APJ-200
吨 数	Tonnage	ton	60	80	125	150	200
行 程	Travel	mm	30	30	30	30	30
每分钟行程数	Number of strokes per minute	s.p.m	200-800	200-700	150-700	150-600	150-600
下工作台尺寸	Lower table size	mm	950x650	1100x750	1200x850	1400x850	1700x950
下料孔	Blanking hole	mm	700x125	800x150	1000x200	1100x200	1300x250
滑块面积	Sliding block area	mm	950x420	1100x500	1200x600	1300x600	1700x700
模高调整行程	Die height adjustment stroke	mm	300-350	330-380	360-410	360-410	370-420
模高调整马达	Die height adjustment motor	kw	0.4	0.75	0.75	0.75	1.5
送料线高度	Feeding line height	mm	160±50	175±50	195±50	195±50	200±50
主电动机	Main motor	kw*p	19	22	37	37	45

机型	Model	型号规格	APJ-220	APJ-300	APJ-350	APJ-400	APJ-450	APJ-500
吨 数	Tonnage	ton	220	300	350	400	450	500
行 程	Travel	mm	30	30	30	40	40	40
每分钟行程数	Number of strokes per minute	s.p.m	150-600	150-400	150-350	150-350	120-300	120-250
下工作台尺寸	Lower table size	mm	1900x1000	2200x1000	2400x1000	2800x1200	3000*1200	3300*1200
下料孔	Blanking hole	mm	1400x300	2000x300	2200x300	2200x400	2400*400	2650*400
滑块面积	Sliding block area	mm	1900x750	2100x900	2400x900	2700x1100	3000*1100	3300*1200
模高调整行程	Die height adjustment stroke	mm	370-420	400-450	400-450	450-500	450-500	490-550
模高调整马达	Die height adjustment motor	kw	1.5	2.2	2.2	3.7	3.7	3.7
送料线高度	Feeding line height	mm	200±50	210±50	210±50	220±50	220±50	220±50
主电动机	Main motor	kw*p	45	55	55	75	90	90

标准配置

- 电动式模高调整
- 模高显示精度0.01mm
- 寸动定位装置
- 电脑可记忆30组(套)模具加工资料
- 三组批量控制
- 二组误送检出
- 连动、单动具有0°及90°定位功能
- 主机正逆转装置
- 油压式滑块固锁装置
- 润滑油冷却循环机
- 意大利宇意一体式离合刹车
- 独立式电控箱
- 工作箱
- 工作灯
- 主机马达变频控制

Standard configuration

- Electric model height adjustment
- Die height display precision 0.01mm
- Inching positioning device
- The computer can memorize data of 30 sets of mold processing materials
- Three groups of batch control
- Two groups of feed error detection
- Linked/single action, with 0° and 90° positioning function
- Host forward/reverse device
- Hydraulic slide lock device
- Lubricating oil cooling cycle machine
- Italian OMPI integrated clutch brake
- Stand-alone electric control box
- Work box
- Work lamp
- Main motor frequency converting control

选择配置

- 下死点精密检测器
- 快速夹模装置
- 油压举模装置
- 高速送料机
- 双头油压开卷机
- 整平出料机
- 油压式防震脚座装置
- 冲压控制器
- 前后隔音安全门

Optional configuration

- Bottom dead center precision detector
- Rapid die clamping device
- Hydraulic die lifting device
- High speed feeder
- Double head hydraulic unwinder
- Leveling discharge machine
- Oil hydraulic shockproof foot device
- Punching controller
- Front and rear sound insulation safety door

本公司随时进行研究改善的工作，因此本型录内所规定尺寸及设计特性，得以变更，不另行通知。
The Company is constantly working on research and improvement. Therefore, the size and design features specified in this manual are subject to change without notice.

60~560T
HIGH SPEED GANTRY PRESS

APH SERIES
高速龙门冲床

高精度稳定性和可靠性

高钢合金铸造机架结构，（通过计算机解析设计出最适合机架）经过消除内应力工艺处理，进一步提高了对于精度不可缺少的高刚性机架，实现了低噪音和低振动化，提高模具使用寿命。

HIGH PRECISION STABILITY AND RELIABILITY

High steel alloy casting frame structure (with the most suitable for the frame designed by computer analysis), processed by the internal stress elimination process, further improving the high rigidity frame which is indispensable for precision, achieving low noise and low vibration, and improving service life of the die.

Specifications 技术参数

机 型	Model	型号规格	APH-60			APH-80		APH-125	APH-200
吨 数	Tonnage	ton	60			80		125	200
行 程	Travel	mm	30	25	20	30	25	30	30
每分钟行程数	Number of strokes per minute	s.p.m	200–800	200–900	200–1000	200–700	200–800	150–700	150–600
下工作台尺寸	Lower table size	mm	950x650			1100x750		1200x850	1700x950
下料孔	Blanking hole	mm	700x125			800x150		1000x200	1300x250
滑块面积	Sliding block area	mm	950x420			1100x500		1200x600	1700x700
模高调整行程	Die height adjustment stroke	mm	300–350			330–380		360–410	370–420
模高调整马达	Die height adjustment motor	kw	0.4			0.75		0.75	1.5
送料线高度	Feeding line height	mm	160±15			175±15		195±15	200±15
主电动机	Main motor	kw*p	19			22		37	45

机 型	Model	型号规格	APH-300	APH-360	APH–550(3300)	APH–550(3800)	APH–560
吨 数	Tonnage	ton	300	360	550	550	560
行 程	Travel	mm	30	30	30–50	30–50	50
每分钟行程数	Number of strokes per minute	s.p.m	150–400	150–400	125~250	125~250	90–200
下工作台尺寸	Lower table size	mm	2000x1000	2400x1000	3300 x 1400	3800 x 1500	4200 x 1300
下料孔	Blanking hole	mm	1600x300	2200x300	2200 x 450	2700 x 450	3100 x 450
滑块面积	Sliding block area	mm	2000x900	2400x900	3300 x 1400	3800 x 1400	4200 x 1200
模高调整行程	Die height adjustment stroke	mm	400–450	400–450	520–600	520–600	520–600
模高调整马达	Die height adjustment motor	kw	2.2	2.2	3.7	3.7	3.7
送料线高度	Feeding line height	mm	210±15	210±15	300±15	300±15	300±15
主电动机	Main motor	kw*p	5555	55	55 x 2	55 x 2	55 x 2

标准配置

- 电动式模高调整
- 模高显示精度0.01mm
- 寸动定位装置
- 电脑可记忆30组(套)模具加工资料
- 三组批量控制
- 二组误送检出
- 连动、单动具有0°及90°定位功能
- 主机正逆转装置
- 油压式滑块固锁装置
- 润滑油冷却循环机
- 分离式离合器、刹车
- 电控箱
- 工作箱
- 工作灯
- 油压举模装置
- 主机马达变频器控制
- 前后隔音安全门

Standard Accessories

- Electric model height adjustment
- Die height display precision 0.01mm
- Inching positioning device
- The computer can memorize data of 30 sets of mold processing materials
- Three groups of batch control
- Two groups of feed error detection
- Linked/single action, with 0° and 90° positioning function
- Host forward/reverse device
- Hydraulic slide lock device
- Lubricating oil cooling cycle machine
- Electric control box
- Work box
- Work lamp
- Hydraulic die lifting device
- Main motor frequency converting control
- Front and rear sound insulation safety door

选择配置

- 下死点精密检测器
- 快速夹模装置
- 高速送料机
- 双头油压开卷机
- 整平出料机
- 油压式防震脚座装置
- 冲压控制器

Optional Accessories

- Bottom dead center precision detector
- Rapid die clamping device
- High speed feeder
- Double head hydraulic unwinder
- Leveling discharge machine
- Oil hydraulic shockproof foot device
- Punching controller

本公司随时进行研究改善的工作，因此本型录内所规定尺寸及设计特性，得以变更，不另行通知。
The Company is constantly working on research and improvement. Therefore, the size and design features specified in this manual are subject to change without notice.

15~150T

KNUCKLE LINK TYPE HIGH SPEED PRECISION PRESS

APZ SERIES

肘节式高速精密冲床

冲压机采用肘节连杆机构，实现热位移最小、跳屑最少和精压效果，最适合用于高速精密加，是一款具有高可靠性的标准机型。150kN~1500kN的产品阵容，大范围系列，高速机型。

A press machine most suitable for fine precision high speed stamping, which has helped realize the minimized thermal displacement and punch penetration, as well as the striking effect, by introducing the knuckle mechanism. The standard model, with its high reliability.
The line-up covers the range from 150T to 1500T, wide series, high-speed model.

技术参数 *Technical parameters*

机 型	Model	型号规格	APZ-15H	APZ-30	APZ-40	APZ-40 W	APZ-60
吨 数	Tonnage	T	15	30	40	40	60
行程长度	Stroke Length	mm	10	20/25/30	20/25/30/32	20/25/32/40	20/25/32
每分钟行程数	Strokes Per Minute	SPM	200-1800(2000)	200-1200/1050/900	180-1000/900/850/850	180-850/800/700/700	100-750/750/650
最大闭模高度	Shutheight	mm	220	240	240	240/240/240/235	300
闭模高度调整量	Shutheitht Adjustment	mm	30	40	50	50/50/50/45	80
滑块面积	Slide Area	mm	500 x 260	600 x 300	750 x 340	950 x 450	1030 x 500
工作台尺寸	Bloster Area	mm	500 x 360	600 x 400	750 x 500	950 x 450	1100 x 600
工作台厚度	Bloster Thinckness	mm	80	90	120	120	140
床台开孔尺寸	Bed Opening	mm	350 x 50	400 x 100	560 x 120	790 x 600	840 x 120
工作台下料尺寸	Bloster Opening	mm	250 x 40	350 x 60	500 x 100	790 x 100	780 x 80
主电动机	Main Motor	kw	15	11	15	18.5	22

机 型	Model	型号规格	APZ-60 W	APZ-80	APZ-80 W	APZ-125	APZ-125S	APZ-150
吨 数	Tonnage	T	60	80	80	125	125	150
行程长度	Stroke Length	mm	25/32/40	20/25/32/36	25/32	25/36	25/36	30/36
每分钟行程数	Strokes Per Minute	SPM	100-700/600/450	120-700/600/550/500	120-500/450	100-400/35	100-600/400	100-400/350
最大闭模高度	Shutheight	mm	340/340/335	320	320	350	350	350
闭模高度调整量	Shutheitht Adjustment	mm	80/80/75	80	80	80	80	80
滑块面积	Slide Area	mm	1280 x 500	1080 x 580	1380 x 580	1480 x 600	1080 x 600	1480 x 600
工作台尺寸	Bloster Area	mm	1350 x 600	1200 x 800	1500 x 800	1600 x 900	1200 x 900	1600 x 900
工作台厚度	Bloster Thinckness	mm	140	160	160	180	180	180
床台开孔尺寸	Bed Opening	mm	1050 x 120	900 x 160	1200 x 160	1300 x 160	960 x 160	1300 x 160
工作台下料尺寸	Bloster Opening	mm	1000 x 80	860 x 120	1160 x 120	1260 x 120	9200 x 120	1260 x 120
主电动机	Main Motor	kw	22	30	30	37	37	37

标准配置

- 通用变频器调速主马达
- 组合型空气摩擦离合器/制动器
- 动态平衡装置
- 电子式凸轮角度控制开关
- 电子式曲轴角指示器
- 触摸式面板式操作屏84英寸
- 速度计
- 总计数器(9位元电子式)
- 预置计数器(9位元电子式)
- 计时器(7位元电子式)
- 分立式操作柜
- 马达逆转装置
- 误送料插座(附切换开关)
- 电动式滑块调节装置
- 微寸动装置(可正逆转)
- 空气控制装置
- 循环给油装置
- 精密凸轮夹钳式送料装置
- 安全门
- 双手式按钮开关
- 防震装置
- 油温加热冷却器
- 材料终端停止开关(接近式)
- 材料涂油器油箱(附电子阀)
- 材料导轨(到工作台端面)
- 张限停止用插座
- 全停止回路(定时器无)
- 200V电源插座
- 空气接头(1/4B)
- 作业用照明

Standard Accessories

- Inverter type variable speed mainmotor
- Combination type air friction clutch /Brake
- Dynamic balancer
- Electronic rotary cam switch
- Electronic crank angle indicator
- Touch Panel 8. 4inch
- Speed meter
- Total counter(9-digit electronic type)
- Preset counter(9-digit electronic type)
- Hour meter(7-digit electronic type)
- Operation box selfstand type
- Motor reverse device
- Missfeed plug/socket(withchangeover switch)
- Electric slide adjustment device
- Micro inching (reverse available)
- Pneumatic control unit
- Circulation type lubrication unit
- Gripper feeder
- Safety door
- Both hands push buttons
- Shock absorber
- Oil heater cooler
- Stock end stop switch (proximity)
- Stock oil tank (with solenoid valve)
- Stock guide(to the end of bolster)
- Over-tension stop outlet
- All stop circuit(without fimer)
- 200V outlet
- Air outlet (1/4B)
- Working light

选择配置

- 精密凸轮夹式送料机
- 材料导轨1个
- 下死点检测仪
- 举模器
- 移模臂
- 落料斗
- 材料滴油装置

Optional Accessories

- Precision Camshaft feeding machine
- Material Cell guide 1 pc
- Bottom dead center precision detector
- Die lifting arm
- Die removal arm
- Waste collector
- Materil oiling devi

本公司随时进行研究改善的工作，因此本型录内所规定尺寸及设计特性，得以变更，不另行通知。
The Company is constantly working on research and improvement. Therefore, the size and design features specified in this manual are subject to change without notice.

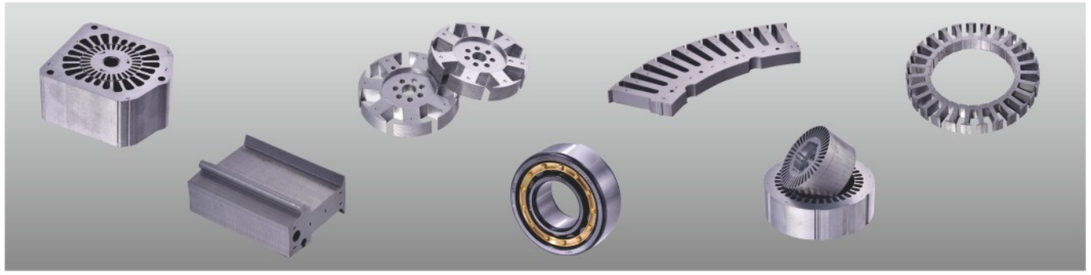

产品特点 *Product features*

- 该肘节式冲压机最大限度地发挥肘节机构的特性，具有机构简单、容量大、高刚性、热平衡性好的特点。
- 配备完全对向式平衡器，尽可能减少由于SPM变化导致的闭模高度位移以及首次冲压与二次冲压的下死点位移。
- 采用左右分力相互抵消的平衡机构、双柱塞8面滚针导轨和双导轨，进一步提高了滑块的偏心荷载能力。
- 配备高寿命、低噪音的新型无侧隙离合器/制动器，实现更安静运转。
- 工作台左右尺寸为60吨级1100mm，60吨宽型1350mm，80吨级1200mm，80吨宽型1500mm，在各自级别的产品系列中做到最宽。
  采用滑块调节量加长，以及电子旋钮式曲柄角度显示等功能，提高了操作性。
- By maximizing the knuckle mechanism feature, simplifying the structure, and increasing the productivity, this knuckle press machine is designed for high igidity and themal balance.
- The perfect symmetrical balancer allows die height displacement due to SPM changes, as well as the BD.C. displacement due to the 1st and 2nd punches, to be suppressed to the minimum.
- The balance mechanism that countervails left and right components of force, and double slide-guiding, system composed of 2 plungers and 8 faces needle bearings, have improved the slide capacityof eccentric load-resistant furthermore.
- The new non-backlash clutch/brake,with its long duraillity and litle noise, achieves quieter operation.
- The lateral bolster size in this wide series is 1,100mm/60ton, 1350mm/60ton, 1200mm/80ton,1,500mm/80ton wide type,which is the maximum in each class.

  In terms of features, operation performance has improved by lengthening the slide adjustment amount,and displaying the crank angle in the electron rotary system.

对称的连杆设计
Symmetrieal Link Design

肘节连杆冲床消除了热变化。此外。该设计有助于提高机器的耐用性,增加模具寿命，降低噪音和震动。

The knuckle link design of the series presses eliminates thermaldisplacement resulting in precisebottom-dead-center repealability Inaddition, the design confributes togreater durabilify, longer die life andreduced noise and vibration.

Slide Motion

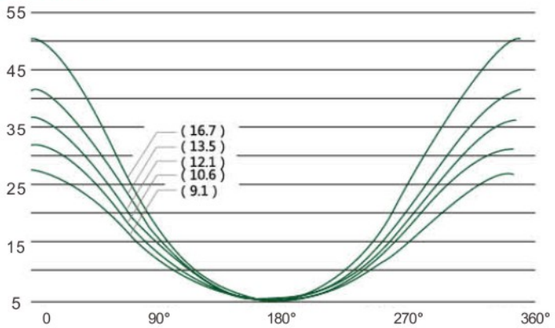

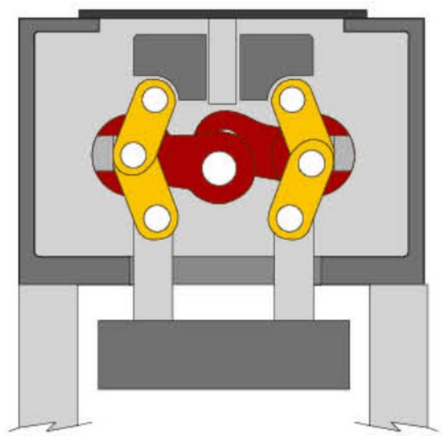

精准的滑块导轨
Accurate SLide Guiding

系列冲床用了8面滚针导轨，进一步提高了滑块的偏心荷载能力，此设计易维护。

Goanwinpresses use 8-point needlebearings for slide guiding as opposedto competitors' post guiding systemsNeedle bearings are able to withstanda much larger load and the long guideways resist off-center loading.Thepositioning of the guides make themeasy to maintain

连杆滑块运动
Link Slide Motion

连杆滑块运动使得滑块在行程底部停留更多的时间，有利于更好零部件的成型减少快速冲级的影响，延长冲床和模具的寿命。此系列冲床锐化模具的时间比普通冲床高出25%。

The link slide motion allows for moretime on the bottom of the stroke forbetter part forming and reduced impaciof snap-thru forces which extends pressand die life. The time between resharpening of the dies in an seriespress is more than 25% greater than thatof a conventionalcrank press.

Eight-Point Needle Bearings

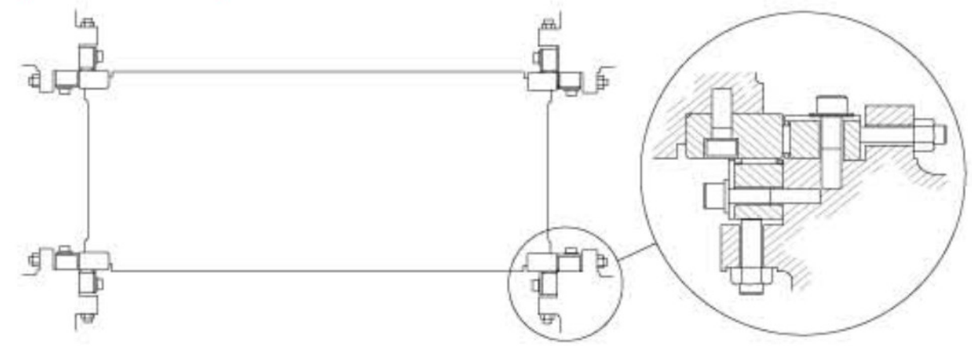

动态平衡器
Dynamic Balancer

动态平衡器使得冲床在惯性效应极小的情况下获得全速运转。当滑块向天移动时，平衡器的重量会往复运动，从而实现垂直和水平方向的完美平衡，且振动小。

The dynamic balancer feature allows thepress to be operated at full speed withminimatnerialeffec.The balancerweightreciprocates as the slide moves downwardresulting in perfect balance vertically andhorizontally with minimal vibration

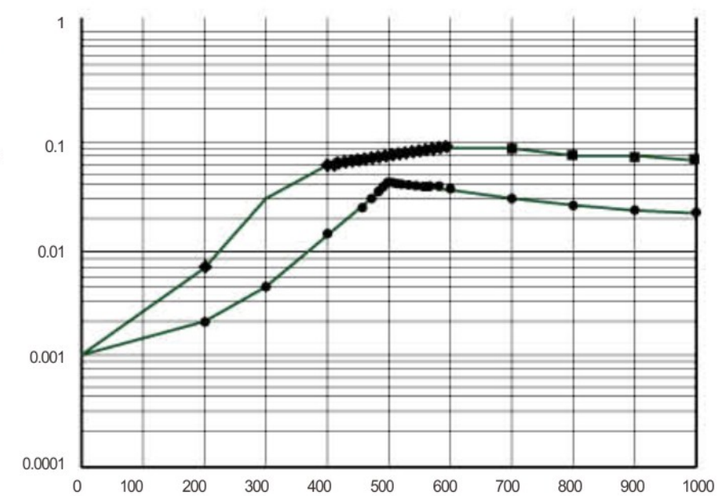

最小模高变化
Minimal shutheight Variation

简单的肘节连杆机构由大直径的销和高强度的连杆组成，提供更大的刚性。这种高刚性和精密轴轴提供更大的下死点重复性。
The extremely simple knuckle linkmechanism consists of large-diameter pinsand high-strength links,offering greaterrigidity. This high rigidity and precisionbearings provide greater bottom-dead-center repeatability

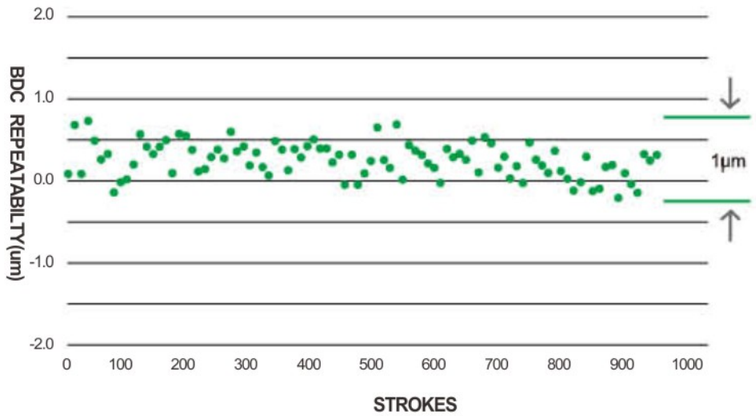

热变位
THeat Generation and Thermal Cancellation

在传统的曲轴压力机机构中，由于工作过程中产生的热量引起热位移积的累计，导致下死点明星波动。连杆机构的设计抵消了热位移即使在长时间的运行中也能最大限度的减少下死点波动。

In the conventional crank press mechanism,thermal displacement accumulates causedby the heat generated during operation,and results in fluctuating bottom-deadcenter significantly The design of the linkmechanism offsets thermal displacement andminimizes bottom-dead-center fluctuationeven in ong fime operafion

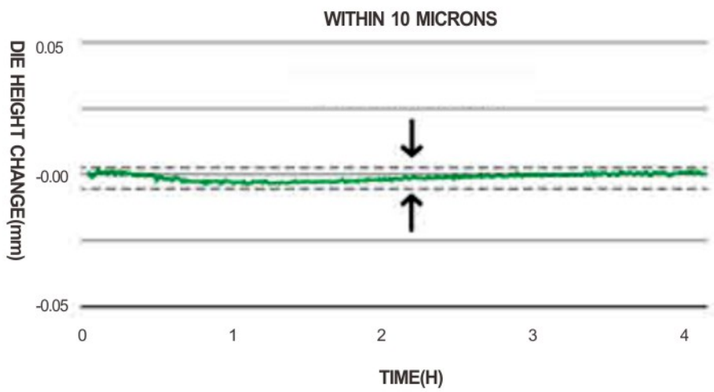

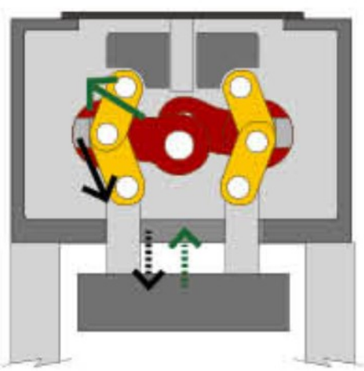

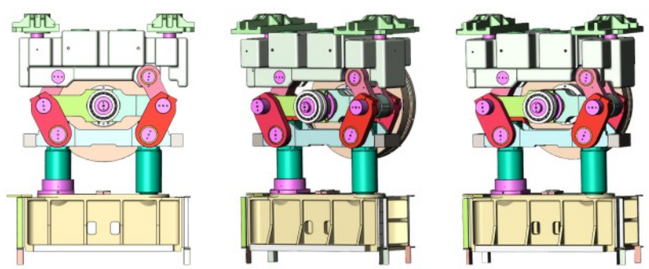

肘节连杆结构与曲轴结构冲压曲线对比图

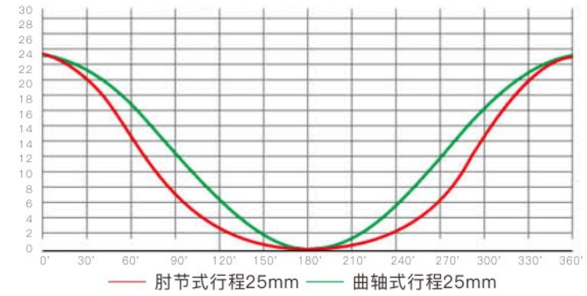

压印效果极佳
Perfect stamping effect

水平对称时节连杆结构,使冲床滑块运动在下死点附近冲压曲线平滑，获得了极好的压印效果满足引线框架等产品的印压要。同时此结构的滑块运动方式,减少高速冲压时对模具的冲击，延长模具寿命。

Horizontally symmetrical toggle linkage design ensure the slidermoving smoothly neat the bottom dead center and achieve aperfect stamping result,/ which-meets the stamping requirementsof lead frame and other products. Meanwhile, the motion modeof the slider reduces the impact on the mould at the time ofhigh-speed punching, and prolongs the mould service life

机 器	主要精度	形 式	日本JIS特级
APZ-30 APZ-40 行程25mm	平行度	左右方向	0.024/0.028mm
		前后方向	0.017/0.018mm
	垂直度	左右方向	0.009mm
		前后方向	0.009mm
	综合间隙 平行度	左右两侧	0.210/0.226mm
APZ-60 APZ-80 行程25mm		左右方向	0.035/0.055mm
		前后方向	0.022/0.0339mm
	垂直度	左右方向	0.009mm
		前后方向	0.009mm
	综合间隙	左右两侧	0.255/0.279mm
APZ系列	下死点精度	恒温恒速	-

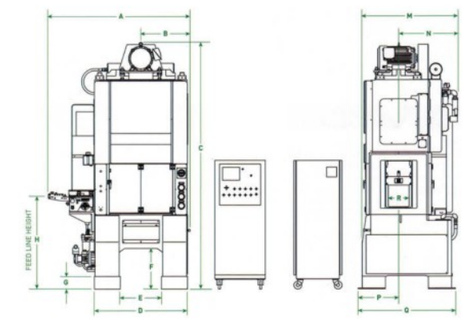

日本JIS特级精度—-刚性好、精度高
JIIS superfine precision — good rigidity and high precision

滑块运动采用2柱塞+8面平面滚针导轨导向,接近零间隙的空间内导向运动。刚性好、抗偏载能力强，冲床精度高,抗冲击、抗磨损导轨材料确保冲床精度长期稳定,延长了模具冲头修模时间。

The slider is guided by a guide of double plungers andoctahedral flat roller with nearly no clearance in it. It has goodrigidity, high inclined loading resistance capability, and high punch press precision High impact-resisting and wear-resistingproperty of the guide materials guarantee long-term stability of the punching machine precision and prolong the intervals of repairing mould.

	APZ-15H	APZ-30	APZ-40	APZ-40W	APZ-60	APZ-60 W	APZ-80	APZ-80W	APZ-40	APZ-125	APZ-125S	APZ-150
A	1510mm	1780mm	1850mm	2050mm	2840mm	3090mm	3000mm	3280mm	1850mm	3520mm	3140mm	3520mm
B	570mm	610mm	645mm	745mm	1420mm	1545mm	1470mm	1620mm	645mm	1670mm	1525mm	1670mm
C	2820mm	3075mm	3180mm	3185mm	3080mm	3170mm	3380mm	3380mm	3180mm	4070mm	3990mm	4185mm
D	990mm	1160mm	1200mm	1530mm	1900mm	2150mm	1960mm	2260mm	1200mm	2580mm	2240mm	2880mm
E	420mm	520mm	530mm	521mm	900mm	1150mm	960mm	1260mm	530mm	1320mm	980mm	1320mm
F	554mm	530mm	521mm	521mm	550mm	550mm	400mm	400mm	521mm	515mm	515mm	/
G	164mm	160mm	161mm	161mm	150mm	150mm	150mm	150mm	161mm	200mm	200mm	210mm
H	1074±mm	1120±20mm	1191±20mm	1191±20mm	1240±20mm	1240±20mm	1280±20mm	1280±20mm	1191±20mm	1630±20mm	1630±20mm	1635±20mm
M	1240mm	1315mm	1300mm	1330mm	1490mm	1490mm	1555mm	1560mm	1300mm	1730mm	1730mm	1730mm
N	720mm	780mm	830mm	830mm	945mm	945mm	970mm	970mm	830mm	1050mm	1050mm	1050mm
P	450mm	535mm	520mm	530mm	705mm	705mm	855mm	820mm	520mm	825mm	825mm	935mm
Q	1060mm	1210mm	1250mm	1270mm	1540mm	1540mm	1840mm	1840mm	1250mm	1780mm	1780mm	2000mm
R	140mm	160mm	200mm	200mm	230mm	230mm	280mm	280mm	200mm	360mm	1	/

15~315T
HIGH PRECISION STEEL FRAME PRESS

APA SERIES
高精密强力钢架冲床

高刚性机架设计，采用优质钢板焊制，经过消除内应力工艺处理。提高了整机精度的稳定性和可靠性。
传动中心與机器整体的中心一致，确保冲压的精确、稳定。

The high-rigidity frame design, welded with high-quality steel and processed by the process of eliminating internal stress. Improve the precision stability and reliability of the machine. The center of the drive is aligned with the center of the machine to ensure accurate and stable punching.

产品特点 Product features

- 为保证机器运转的相对平稳性，采用对称两只滑轨，平衡器装置设计方式.
- 调模精密高達0. 1mm，安全、便捷、可靠;
- 曲轴、齿轮组、连杆等部件，经氧化和研磨等工艺处理，具有极高的综合性和耐磨性;
- 采用高度灵敏、可靠的离合器/刹车器装置和国际顶尖的双联电磁阀，过载保装置，确保压力机滑块运转及停止的精确性与安全性;
- 机器结构设计合理，便於实现自动化生产，降低成本，提高效率;
- 先进的设计理念，低噪音，低消耗，节省能源。

- To ensure the relative stability of the machine operation, the symmetrical two slide rails and the balancer device design are applied.
- The die precision may be up to 0.1mm and is safe, convenient and reliable.
- The crankshaft, the gear set, the connecting rod, etc. are processed by oxidation and grinding, and have extremely high comprehensiveness and wear resistance performance;
- Highly sensitive and reliable clutch/brake device and internationally leading double solenoid valve and overload protection device are applied to ensure the accuracy and safety of the operation and stop of the press slide;
- The machine structure is designed reasonably, which is convenient for automatic production, reducing costs and improving efficiency;
- Advanced design concept, low noise, low consumption and energy saving.

标准配置 Standard configuration

- 油压式过载保护装置
- 手动式滑块调整装置(TP60及60以下)
- 电动式滑块调整装置(TP60以上)
- 机械式模高指示器(TP60及60以下)
- 电动式模高指示器(TP60以上)
- 滑块及模具平衡装置
- 空气源接头
- 二度落保护装置
- 喷风装置
- 维护工具及工具箱
- 使用说明书
- 变频器
- 电源插座
- 防震脚
- 7寸触摸屏，电子凸轮
- 角度显示器
- 吨位测量及保护装置
- 下死点检测
- 预裁预断功能

- Oil hydraulic overload protection device
- Manual slider adjustment device (TP60 and below 60)
- Electric slider adjustment device (TP60 above)
- Mechanical die height indicator (TP60 and below 60)
- Electric die height indicator (TP60 above)
- Slider and die balancing device
- Air source connector
- Secondary drop protection device
- Air blast device
- Maintenance tool and tool box
- Instruction manual
- Frequency converter
- Power outlet
- Shockproof support
- 7 inch touch screen, electronic cam
- Angle display
- Tonnage measurement and protection device
- Bottom dead center detection
- Pre-cut and pre-break function

选择配置 Optional configuration

- 湿式离合器
- 电动式黄油润滑装置
- 气压模垫装置
- 脚踏开关
- 快速换模装置(举模器、夹模器或移模器)
- 滑块上部打料装置
- 误送检测装置
- 光电保护装置
- 触摸屏控制系统
- 自动送料装置(送料机、料架、矫正机)
- 机械手
- 模具照明装置

- Wet clutch
- Electric butter lubrication device
- Pneumatic die pad device
- Foot switch
- Quick die changer (die lifter, die clamp or die remover)
- Slider upper feeding device
- Misfeed detection device
- Photoelectric protection device
- Touch screen control system
- Automatic feeding device (feeder, rack, straightening machine)
- Mechanical arm
- Die lighting device

外型尺寸 External dimension

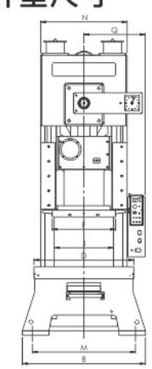

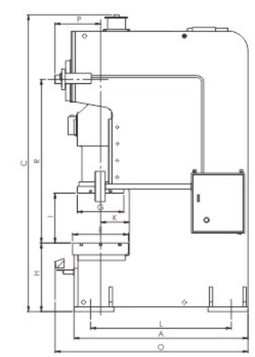

规 格 Specification	APA-25	APA-35	APA-45	APA-60	APA-80	APA-110	APA-125	APA-160	APA-200	APA-260	APA-315
A	1100	1200	1400	1420	1595	1720	1720	2080	2140	2440	2605
B	840	900	950	1000	1170	1290	1290	1390	1490	1780	1930
C	2135	2345	2435	2780	2980	3195	3195	3520	3670	4075	4470
D	680	800	850	900	1000	1150	1150	1250	1350	1500	1600
E	300	400	440	500	550	600	600	760	820	860	900
F	470	520	560	700	770	910	910	990	1130	1250	1300
G	250	285	340	400	420	470	470	550	630	700	750
H	800	790	800	795	840	840	840	900	910	995	1030
I	260	290	320	420	480	530	530	590	640	650	750
J	444	488	502	526	534	616	616	660	720	860	930
K	160	205	225	255	280	305	305	385	415	435	455
L	980	1040	1170	1180	1310	1420	1420	1700	1760	1850	2035
M	700	800	840	890	980	1100	1100	1200	1300	1500	1730
N	540	620	670	720	780	920	920	1000	1100	1260	1380
O	1275	1375	1575	1595	1770	1895	1895	1835	1895	2615	2780
P	278	278	313	333	448	488	488	545	545	593	688
Q	447	560	585	610	620	685	685	725	775	855	915
R	935	1073	1130	1378	1506	1650	1650	1900	1960	2188	2460

名 称	Name	型号规格	APA-25		APA-35		APA-45		APA-60	
型 式	Model		V型	H型	V型	H型	V型	H型	V型	H型
吨 数	Tonnage	Ton	25		35		45		60	
冲力发生位置	Rated tonnage point	mm	3.2	1.6	3.2	1.6	3.2	1.6	4	2
每分钟行程数 变速	Number of strokes per minute Variable speed	s.p.m	60-140	130-200	40-120	110-180	40-100	100-150	35-90	80-120
每分钟行程数 定速	Number of strokes per minute Constant speed	s.p.m	110		85		75		65	
行程	Travel	mm	60	30	70	40	80	50	120	60
最大闭合工作高度	Maximum closed working height	mm	200	215	220	235	250	265	310	340
滑块调整量	Slider adjustment volume	mm	50		55		60		75	
上工作台尺寸	Upper table size	mm	300×220×50		360×250×50		400×300×60		500×360×70	
下工作台尺寸	Lower table size	mm	680×300×70		800×400×70		850×440×80		900×500×80	
模柄孔	Die handle hole	mm	⌀38.1		⌀38.1		⌀38.1		⌀50	
主电动机	Main motor	kw	3.7		3.7		5.5		5.5	
滑块调整机构	Slider adjustment mechanism	HP	手动 Manual operation							
使用空气压力	Applied air pressure	kg/cm2	6		6		6		6	
冲床精度	Press precision		GB(JIS)1class 一级		GB(JIS)1class 一级		GB(JIS)1class 一级		GB(JIS)1class 一级	
冲床(长×宽×高)	Press (L×W×H)	mm	1280×850×2200		1380×900×2400		1600×950×2500		1600×1000×2800	
模垫能力	Die cushion capacity	Ton	–		2.3		2.3		3.6	
模垫行程长	Die cushion stroke length	mm	–		50		50		70	
模垫有效面积	Die cushion effective area	mm2	–		300×230		300×230		350×300	

APA-80		APA-110		APA-125		APA-160		APA-200		APA-260		APA-315	
V型	H型	V型	H型	V型	H型	V型	H型	V型	H型	V型	H型	V型	H型
80		110		125		160		200		260		315	
4	2	6	3	6	3	6	3	6	3	6	3	7	3.5
35-80	80-120	30-60	60-90	30-60	60-90	20-50	40-70	20-50	40-70	20-50	50-70	20-40	40-50
65		50		50		35		35		35		30	
150	70	180	80	180	80	200	90	200	90	200	100	250	150
340	380	360	410	360	410	400	450	450	500	460	510	500	550
80		80		80		100		100		110		120	
560×420×70		650×470×80		650×470×80		700×550×90		850×630×90		950×700×90		1000×750×100	
1000×550×90		1150×600×110		1150×600×110		1250×760×140		1350×820×150		1500×860×160		1600×900×180	
⌀50		⌀50		⌀50		⌀65		⌀65		⌀65		⌀65	
7.5		11		11		15		18		22		30	
电动 Electrical driving													
6		6		6		6		6		6		6	
GB(JIS)1class 一级		GB(JIS)1class 一级		GB(JIS)1class 一级		GB(JIS)1class 一级		GB(JIS)1class 一级		GB(JIS)1class 一级		GB(JIS)1class 一级	
1800×1180×2800		1900×1300×3200		1900×1300×3200		2300×1400×3650		2300×1500×3800		2615×1790×4075		2780×1850×4470	
3.6		6.3		6.3		10		10		14		14	
70		80		80		80		80		100		100	
450×310		500×350		500×350		650×420		650×420		710×480		810×480	

APA SERIES highprecision press

上工作台 Upper table

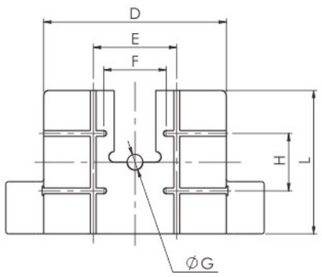

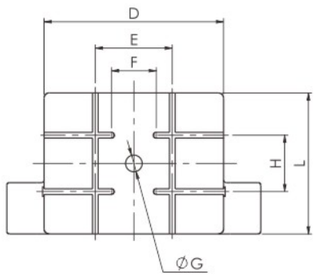

Model	A	B	C	D	E	F	G	H	L	T型沟
APA-25	240	120	90	300	–	150	Φ38.1	80	220	I
APA-35	280	140	120	360	–	160	Φ38.1	100	250	I
APA-45	300	150	120	400	–	210	Φ38.1	120	300	I
APA-60	320	160	150	500	220	220	Φ50	160	360	II
APA-80	360	180	150	560	300	220	Φ50	180	420	II
APA-110	400	200	160	650	300	220	Φ50	220	470	II
APA-125	400	200	160	650	300	220	Φ50	220	470	II
APA-160	440	220	220	700	300	175	Φ65	220	550	II
APA-200	440	220	220	850	300	175	Φ65	220	630	II
APA-260	480	240	280	950	420	200	Φ65	300	700	II
APA-315	520	260	290	1000	420	200	Φ65	300	750	II

下工作台 Lower table

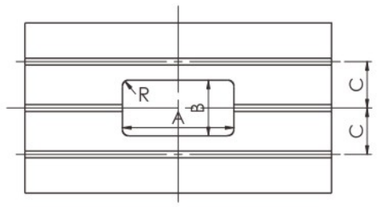

T型槽祥图 T-type groove diagram

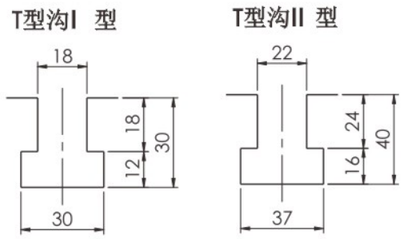

能力曲线图 Capability curve diagram

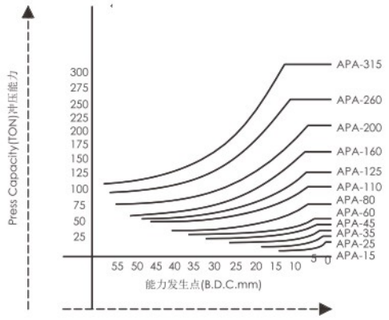

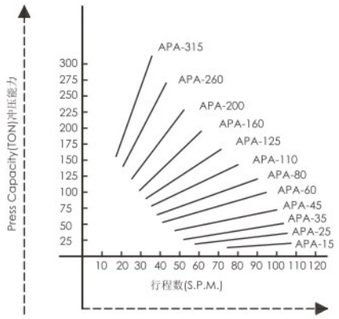

110~315T

DOUBLE CRANKSHAFT PRECISION STEEL FRAME PRESS

APC SERIES

双曲轴精密钢架冲床

高刚性机架设计，采用优质钢板焊制，经过消除内应力工艺处理。提高了整机精度的稳定性和可靠性。
传动中心與机器整体的中心一致，确保冲压的精确、稳定。

The high-rigidity frame design, welded with high-quality steel and processed by the process of eliminating internal stress. Improve the precision stability and reliability of the machine. The center of the drive is aligned with the center of the machine to ensure accurate and stable punching.

技术参数 *Technical parameters*

机 型	Model	型号规格	APC-110		APC-160		APC-200		APC-250		APC-315	
型 式	Model		V型	H型	V型	H型	V型	H型	V型	H型	V型	H型
吨 数	Tonnage	Ton	110		160		200		250		315	
能力发生点	Rated tonnage point	mm	5	3	6	3	6	3	7	3.5	7	3.5
行程长	Stroke length	mm	180	110	200	130	250	150	280	170	300	170
行程数	Number of strokes	s.p.m	35-65	50-100	30-55	40-85	25-45	35-70	20-35	30-60	20-35	30-50
最大模高	Maximum die height	mm	400	435	450	485	500	550	550	605	550	615
滑块调整量	Slider adjustment volume	mm	100		100		120		120		120	
下工作台尺寸	Lower table size	mm	1800 × 650 ×130		2000 × 760 × 150		2400 × 840 × 170		2700 × 900 × 170		2800 x 1000 x 190	
上工作台尺寸	Upper table size	mm	1400 × 500 × 70		1600 × 550 × 70		1850 × 650 × 95		2100 × 700 × 95		2200 x 900 x 95	
主马达	Main motor	kW	11		15		18.5		22		30	
供给气压	Supply air pressure	kg/cm2	5		5		5		5		5	
精度	Precision		JIS(CNS) 1class 一级									
模垫形式	Die cushion type		Two plate & two cylinders 二板双缸									
能力	Capacity	Ton	3.6 × 2		6.3 × 2		10 × 2		14 × 2		14 × 2	
空气压力	Air pressure	kg/cm²	6.5		7.2		6.75		9		9	
行程	Stroke	mm	70		70		80		100		100	
模垫顶板面积	Die cushion top plate area	mm²	350 × 235 × 2组		410 × 260 × 2组		540 × 350 × 2组		640 × 470 × 2组		640 × 470 × 2组	

产品特点 *Product features*

- 为保证机器运转的相对平稳性，采用对称两只滑轨，平衡器装置设计方式;
- 调模精密高達0．1mm，安全、便捷、可靠;
- 采用高度灵敏、可靠的离合器/刹车器装置和国际顶尖的双联电磁阀，过载保装置，确保压力机滑块运转及停止的精确性与安全性;
- 曲轴、齿轮组、连杆等部件，经氧化和研磨等工艺处理，具有极高的综合性和耐磨性;
- 机器结构设计合理，便於实现自动化生产，降低成本，提高效率;
- 先进的设计理念，低噪音，低消耗，节省能源。

- To ensure the relative stability of the machine operation, the symmetrical two slide rails and the balancer device design are applied.
- The die precision may be up to 0.1mm and is safe, convenient and reliable.
- The crankshaft, the gear set, the connecting rod, etc. are processed by oxidation and grinding, and have extremely high comprehensiveness and wear resistance performance;
- Highly sensitive and reliable clutch/brake device and internationally leading double solenoid valve and overload protection device are applied to ensure the accuracy and safety of the operation and stop of the press slide;
- The machine structure is designed reasonably, which is convenient for automatic production, reducing costs and improving efficiency;
- Advanced design concept, low noise, low consumption and energy saving.

外型尺寸 *External dimension*

规 格 Specification	APC-110		APC-160		APC-200		APC-250		APC-250	
型式 Model	V型	H型	V型	H型	V型	H型	V型	H型	V型	H型
AA	2000		2200		2620		3000		3000	
AB	1900		2080		2460		2800		2800	
AC	1360		1520		1820		2200		2200	
AD	1800		2000		2400		2700		2700	
AE	1510		1660		1990		2220		2220	
AF	1400		1600		1850		2100		2100	
AG	1780		1980		2320		2590		2590	
BA	1745		1940		2235		2545		2545	
BB	1295		1380		1885		2195		2195	
BC	650		760		840		900		900	
BD	330		385		425		455		455	
BE	500		550		650		700		700	
HA	(630)		(730)		(790)		(820)		(820)	
HB	830	865	990	1025	1070	1120	1100	1155	1100	1155
HC	400	435	450	485	500	550	550	605	550	605
HD	180	110	200	130	250	150	280	170	280	170
HE	3059		3709		3849		4304		4304	
HF	1240		1440		1570		1680		1680	
Øh	Ø35		Ø47		Ø54		Ø54		Ø54	

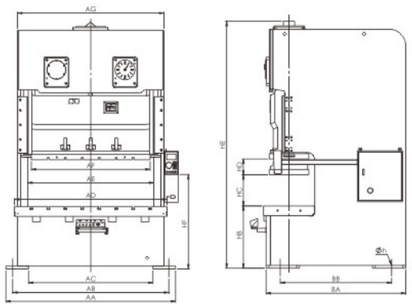

本公司随时进行研究改善的工作，因此本型录内所规定尺寸及设计特性，得以变更，不另行通知。
The Company is constantly working on research and improvement. Therefore, the size and design features specified in this manual are subject to change without notice.

80~260T
SEMI-CLOSED HIGH PRECISION STEEL FRAME PRESS

APD SERIES
半闭式高精密强力钢架冲床

直壁式一体型机架，适合精密连续模加工。
无C型冲床机架的开喉缺点，可节省模具维修费用。

Straight wall integrated frame suitable for precision continuous die machining.
Get rid of shortcomings of open throat of C-type press frame, saving the maintenance cost of the die.

技术参数 Technical parameters

机 型	Model	型号规格	APD-80		APD-110		APD-160		APD-200		APD-260	
型 式	Model		V型	H型	V型	H型	V型	H型	V型	H型	V型	H型
吨 数	Tonnage	Ton	80		110		160		200		260	
冲力发生位置	Rated tonnage point	mm	4	2	6	3	6	3	6	3	7	3.5
行程	Stroke	mm	150	70	180	80	200	90	200	100	250	150
最大闭合工作高度	Maximum closed working height	mm	340	380	360	410	460	510	460	510	500	550
每分钟行程数	Number of strokes per minute	s.p.m	35-80	80-120	30-60	60-90	20-50	40-70	20-50	50-70	20-40	40-50
滑块调整量	Slider adjustment volume	mm	80		80		100		110		120	
上工作台尺寸	Upper table size	mm	560×420×70		650×470×80		700×550×90		850×630×90		950×700×100	
下工作台尺寸	Lower table size	mm	930×550×90		1090×600×110		1190×800×140		1390×820×160		1550×840×180	
主电动机	Main motor	kw.p	7.5		11		15		18		22	
滑块调整机构	Slider adjustment mechanism	HP	电动 Electrical driving									
使用空气压力	Applied air pressure	kg/cm2	6		6		6		6		6	
冲床(长×宽×高)	Press (L×W×H)	mm	1300×1890×3000		1420×1985×3200		1600×2200×3500		1750×2500×3900		2780x1850x4470	
冲床精度	Press precision		GB(JIS)1class 一级									
模垫能力	Die cushion capacity	Ton	3.6		6.3		10		14		14	
模垫行程长	Die cushion stroke length	mm	70		80		80		100		100	
模垫有效面积	Die cushion effective area	mm2	450×310		500×350		650×420		710×480		810×480	

标准配置 Standard configuration

- 变频器 • IFrequency converter
- 油压式过载保护装置 • Oil hydraulic overload protection device
- 电动式滑块调整装置 • Electric slider adjustment device
- 电动式模高指示器 • Electric die height indicator
- 滑块及模具平衡装置 • Slider and die balancing device
- 空气源接头 • Air source connector
- 二度落保护装置 • Secondary drop protection device
- 维护工具及工具箱 • Maintenance tool and tool box
- 使用说明书 • Instruction manual
- 电源插座 • Power outlet
- 防震脚 • Shockproof support
- 7寸触摸屏，电子凸轮 • 7 inch touch screen, electronic cam
- 角度显示器 • Angle display
- 吨位测量及保护装置 • Tonnage measurement and protection device

选择配置 Optional configuration

- 电动式黄油润滑装置 • Electric butter lubrication device
- 气压模式装置 • Pneumatic die pad device
- 预裁计数器 • Pre-load counter
- 预断计数器 • Pre-break counter
- 脚踏开关 • Foot switch
- 快速换模装置(举模器、夹模器或移模臂) • Quick die changer (die lifter, die clamp or die remover)
- 滑块上部打料装置 • Slider upper feeding device
- 误送检测装置 • Misfeed detection device
- 光电保护装置 • Photoelectric protection device
- 送料机(空气、机械及NC各类) • Feeder (air, machinery and NC)
- 料架 • Leveling machine
- 矫平机 • Rack
- 机械手 • Mechanical arm
- 模具照明装置 • Die lighting device
- 左(右)侧送料装置 • Left/right feeding device
- PAC100控制系统 • PAC100 control system
- 人机控制系统 • Human-machine control system

产品特点 Product features

- 高钢性机架，导轨在街头中心线上及支撑行程长，可确保长期动态稳定精度及延长模具寿命。
- 冲头底面积左右较C型冲床大15—25%，允许模具工程数增加和提高附加价值加工。
- 高扭矩气动刹车离合器，来令片寿命长，维修成本低；无污染、低噪音、符合环保需求。
- 高安全性、高亲和力、多功能的电子式电控系统。
- 可搭配各种自动化设备，操作容易。

- High-rigidity frame with long guide rails on the centerline and the support stroke to guarantee long-term dynamic stability precision and extend the service life of the die.
- The bottom area of the press is 15-25% larger than that of the C-type press, enabling the increase of the number of die engineering and improve the added value.
- High-torque pneumatic brake clutch for long life and low maintenance cost; no pollution, low noise, and environmentally friendly.
- High safety, high affinity, multi-function electronic control system.
- Applicable with a variety of automation equipment with easy operation.

本公司随时进行研究改善的工作，因此本型录内所规定尺寸及设计特性，得以变更，不另行通知。
The Company is constantly working on research and improvement. Therefore, the size and design features specified in this manual are subject to change without notice.

110~1000T
CLOSE TYPE DOUBLE CRANKSHAFT PRECISION STEEL FRAME PRESS

APE SERIES
闭式门型双曲轴精密钢架冲床

直臂式机架，前后对称变形量小，最适合精密连续模加工；
无C型冲床机架的开喉缺点，可节省模具维修费用。

Straight arm frame, small amount of symmetrical deformation before and after, most suitable for continuous precision die machining;
Get rid of shortcomings of open throat of C-type press frame, saving the maintenance cost of the die

产品特点

- 高钢性机架可确保长期稳定精度
- 高扭矩气动离合器，来令片寿命长，维修成本低；无污染、低噪音、附合环保要求
- 高安全性、高亲和力、多功能的电子式电控系统
- 可搭配各类自动化周边设备，操作容易

Product features

- High-rigidity frame to guarantee long-term stability
- High-torque pneumatic brake clutch for long life and low maintenance cost; no pollution, low noise, and environmentally friendly.
- High safety, high affinity, multi-function electronic control system.
- Applicable with a variety of automation equipment with easy operation

外型尺寸 External dimension

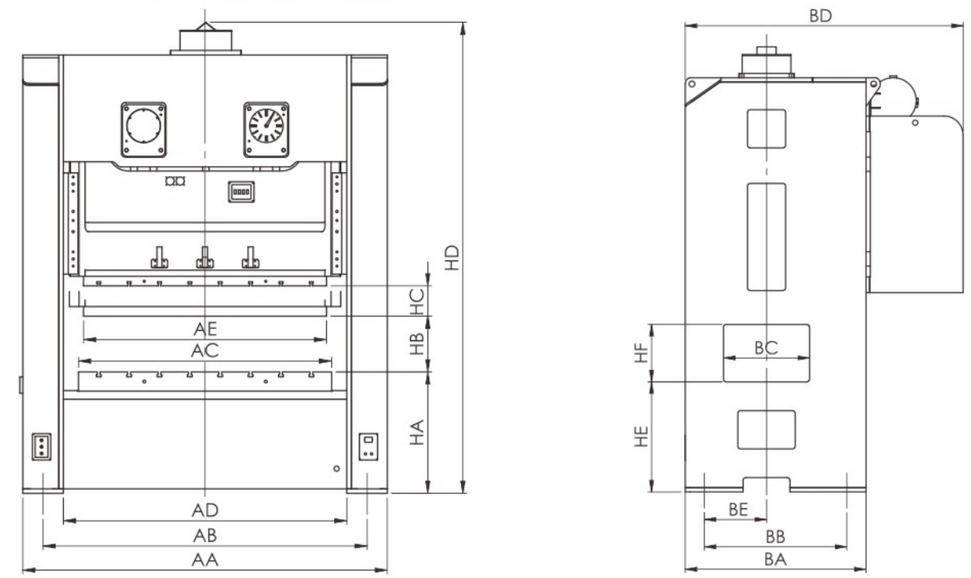

规格 Specification	APE-110	APE-160	APE-200	APE-250	APE-300	APE-400	APE-500	APE-600	APE-800	APE-1000
AA	2430	2590	3000	3600	3600	4100	4400	4800	4500	4680
AB	2080	2240	2650	3250	3250	3750	3950	4200	3950	4050
AC	1650	1800	2200	2500	2500	3200	3400	3600	3200	3200
AD	1720	2100	2290	2800	2800	3300	3500	3700	3400	3400
AE	1400	1450	1850	2100	2200	3100	3100	3300	3000	3000
BA	1285	1450	1600	1890	1890	2100	2200	2300	2630	2700
BB	1125	1290	1440	1730	1730	1940	1960	2000	2100	2230
BC	700	700	900	900	900	900	900	1000	1200	1300
BD	2100	2309	2700	3000	3000	3129	3420	3582	3750	4240
BE	490	490	620	770	770	770	830	850	1020	1060
HA	830	1000	1000	1180	1200	1200	1320	1460	1700	1750
HB	400	450	500	550	550	550	600	650	600	600
HC	180	180	250	280	300	300	300	300	300	300
HD	3000	3757	4015	4593	4903	5195	5890	6532	6407	6800
HE	780	950	940	1150	1150	1150	1290	1420	1650	1700
HF	450	450	600	600	600	600	700	700	600	600

名　称	Name	规 格	APE-110		APE-160		APE-200		APE-250	
型　式	Model		S型	H型	S型	H型	S型	H型	S型	H型
吨　数	Tonnage	Ton	110		160		200		250	
冲力发生位置	Rated tonnage point	mm	6	3	6	3	6	3	7	3
行　程	Stroke	mm	180	110	180	130	250	150	280	170
每分钟行程数	Number of strokes per minute	s.p.m	35-65	50-100	30-55	40-85	20-50	35-70	20-40	30-60
最大闭合工作高度	Maximum closed working height	mm	400	435	450	400	500	450	550	450
滑块调整量	Slider adjustment volume	mm	100		100		120		120	
上工作台尺寸	Upper table size	mm	1400 × 500		1700 × 650		1850×750		2300 × 900	
下工作台尺寸	Lower table size	mm	1650 × 650		1800 × 760		2200×940		2500 × 1000	
侧向开口	Side opening	mm	700 × 450		700 × 450		800×600		900 × 600	
主电动机	Main motor	Kw	11		15		18		22	
滑块调整机构	Slider adjustment mechanism	Kw × P	1 × 4		1× 4		2× 4		2× 4	
使用空气压力	Applied air pressure	kg/cm2	6		6		6		6	
冲床精度	Press precision		GB(JIS)1class 一级		GB(JIS)1class 一级		GB(JIS)1cl ass 一级		GB(JIS)1class 一级	

APE-300		APE-400		APE-500		APE-600		APE-800	APE-1000
S型	H型	S型	H型	S型	H型	S型	H型	S型	S型
300		400		500		600		800	1000
7	3	7	3	9	6	9	6	8	8
300	170	300	170	300	180	300	180	300	300
20-35	30-50	20-30	20-40	18-25	20-30	15-25	20-30	20-30	20-30
550	450	550	450	580	480	650	500	600	600
120		120		120		120		150	150
2300 × 900		2800 × 1000		2900 × 1000		3100 × 1100		3000 x 1200	3000 x 1300
2700 x 1000		3200 × 1000		3300 × 1200		3500 × 1200		3200 x 1200	3200 x 1300
900 × 600		900 × 600		900 × 700		1000 × 700		1200 x 600	1300 x 600
30		30		45		55		75	90
2 × 4		2 × 4		3 × 4		3 × 4		5 x 4	5 x 4
6		6		6		6		6	6
GB(JIS)1class 一级		GB(JIS)1class 一级		GB(JIS)1class 一级		GB(JIS)1class 一级		GB(JIS)1class 一级	GB(JIS)1class 一级

本公司随时进行研究改善的工作，因此本型录内所规定尺寸及设计特性，得以变更，不另行通知。
The Company is constantly working on research and improvement. Therefore, the size and design features specified in this manual are subject to change without notice.

APE SERIES *Close type double crankshaft precision steel frame press*

标准配置 *Standard configuration*

- 变频器
- 易田标准操作系统
- 电子式曲轴角度指示器
- 电子式运转速度指示器
- 运转模式选择/切/寸动/安全一行程/连续
- 油压过负荷保护装置
- 二度落保护装置
- T型双手按钮操作台
- 双联电磁阀
- 电动滑块调整装置
- 数字式模高指示器(单位0.1mm)
- 滑块及模具平衡装置
- 累计A计数器6位数
- 预调计数器6位数
- 保养计数器6位数
- 寿命计数器6位数
- 电子式旋转凸轮开关预备6连
- 喷风装置1/2 ” 一回路
- 空气源接头1/2 ” 二回路
- 误送检知插座
- 电源插座（仅适用单相110V电源）
- 防震脚

- Frequency converter
- Etone standard operation system
- Electronic crankshaft angle indicator
- Electronic operation speed indicator
- Operation model selection/switching/inching/safety-stroke/continuity
- Oil hydraulic overload protection device
- Secondary drop protection device
- T-type two-handed button console
- Double solenoid valve
- Electric slider adjustment device
- Digital die height indicator (unit: 0.1mm)
- Slider and die balancing device
- Total A counter (6 digits)
- Preset counter (6 digits)
- Maintenance counter (6 digits)
- Life counter (6 digits)
- Electronic rotary cam switch preparation 6 connection
- Air blast device 1/2” primary loop
- Air source connector 1/2” primary loop
- Misfeed detection outlet
- Power socket (only for single-phase 110V power supply)
- Shockproof support

选择配置 *Optional configuration*

- 模 垫 装 置
- 变速马达
- 光电安全装置
- 滑块上部顶料装置
- 主马达逆转装置
- 脚踏开关
- 安全挡块及安全插销
- 附检知变联电磁阀
- 误送检知装置
- 轮刹车装置
- 快速模具交换
- 上夹模器
- 下夹模器
- 举 模 器
- 移模臂
- 基础螺丝及基础板
- 自动送料装置
- 三合一NC矫直送料机
- Nc滚轮送料机
- 二合一料架兼矫直机
- 矫直机(整平机)

- Die pad device
- Variable speed motar
- Photoelectric safety device
- Slider upper feeding device
- Main motor reverse device
- Foot switch
- Safety stop and safety latch
- Attached inspection and change solenoid valve
- Misfeed detection device
- Wheel brake device
- Quick die exchange
- Upper die clamp
- Lower die clamp
- Die lifter
- Die removal arm
- Base screw and base plate
- Automatic feeding device
- Three-in-one NC straightening feeder
- Nc roller feeder
- Two-in-one rack and straightening machine
- Straightening machine (leveling machine)

T型槽详图 *Detailed T-type groove diagram*

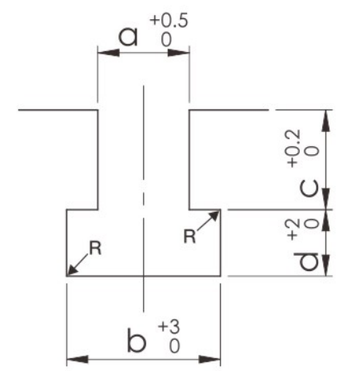

MODEL	A	B
a	22	28
b	37	48
c	24	28
d	16	20
R	1	1

能力曲线图 *Tonnage & Energy,Stroke Curve*

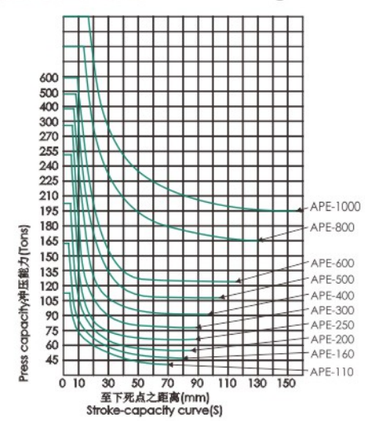

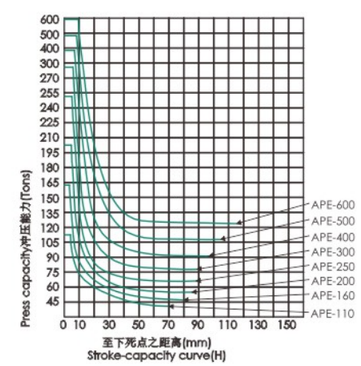

110~600T

CLOSE-TYPE SINGLE CRANKSHAFT PRECISION PRESS

APF SERIES

闭式单曲轴精密冲床

- 融合欧美、日本先进技术/机能结构CAE动态仿真优化设计性能。
- 高刚性床身优质钢仿形焊制或整体铸造件回火/振动应力处理。
- 齿轮、 曲轴等主关零部件经镀硬铬/氮化/研磨高标准工艺处理。

- Integrated with European and American, Japanese advanced technology/functional structure CAE dynamic simulation to optimize design performance.
- High-rigidity bed high-quality steel profile welding or integral casting tempering/vibration stress treatment.
- The main closing parts such as gears and crankshafts are treated with a hard chrome/nitriding/grinding by high standard process.

技术参数 Technical parameters

名 称	Name	规格	APF-110		APF-160		APF-200		APF-260		APF-300		APF-400		APF-500	APF-600
型式	Model		V型	H型	V型	H型	V型	H型	V型	H型	V型	H型	V型	H型	V型	V型
吨数	Tonnage	ton	110		160		200		260		300		400		500	600
能力发生点	Rated tonnage point	mm	6	3	6	3	6	3	7	3.5	7	3.5	9	4.5	10	13
行程长	Stroke length	mm	180	80	200	90	200	100	250	150	300	170	300	200	250	250
行程数	Number of strokes	s.p.m	30–60	60–90	20–50	40–70	20–50	50–70	20–40	40–50	20–40	35–50	15–25	20–35	20–30	15–20
		s.p.m	50		35		35		30		30		20		20	20
最大模高	Maximum die height	mm	360	410	460	510	460	510	500	550	550	615	550	600	550	550
滑块调整量	Slider adjustment volume	mm	80		100		110		120		120		150		120	120
上工作台尺寸	Upper table size	mm	1000x550x70		1100x600x90		1200x650x90		1300x700x100		1400x800x110		1500x850x110		1400x800	1400x1200
下工作台尺寸	Lower table size	mm	1100x600x110		1200x800x140		1300x820x160		1400x840x180		1500x950x200		1600x1000x200		1500x1000	1700x1300
侧向开口	Side opening	mm	700x500		850x600		880x650		900x700		1000x750		1000x750		900x800	1000x900
主电动机	Main motor	kwxp	11x4		15x4		18x4		22x4		30x4		40x4		55x4	75x4
滑块调整电机	Slider adjustment motor	kwxp	0.4x4		0.75x4		0.75x4		1.5x4		1.5x4		2.2x4		3x4	3x4
使用空气压力	Applied air pressure	kg/cm2	6	6	6	6	6	6	6	6	6	6	6	6	6	6
冲床精度	Press precision		GB/T23280-2009 [JIS1级]													

标准配置

- 油压过负荷保护装置
- 电动滑块调整装置
- 数字式模高指示器(单位:0.1mm)
- 滑块模具平衡装置
- 旋转凸轮开关
- 曲轴角度指示器
- 循环集中式润滑给油装置
- 电磁式行程计数器
- 二度落保护装置
- 可程控器
- 移动式T型操作台
- 空气源接头
- 独立式电气控制箱
- 维护工具及工具箱
- 服务工具和工具套件

Standard configuration

- Oil hydraulic overload protection device
- Electric slider adjustment device
- Digital die height indicator (unit: 0.1mm)
- Slider and die balancing device
- Rotary cam switch
- Crankshaft angle indicator
- Circulating centralized lubrication oil supply device
- Electromagnetic stroke counter
- Secondary drop protection device
- Programmable controller
- Mobile T-type console
- Air source connector
- Freestanding electrical control box
- Maintenance tool and tool box
- Service tools and toolkits

选择配置

- 模垫
- 滑块上部顶料装置
- 模具照明灯
- 主马达逆转装置
- 光电安全装置
- 安全槽块及安全插销
- 预调计数器(6位数)
- 荷重检知装置
- 误送检知装置
- 变频器
- 基础螺丝及基础板、防震装置
- 安全架及安全梯
- 电源插座
- 快速换模装置

Optional configuration

- Die cushion
- Slider upper feeding device
- Die lighting lamp
- Main motor reverse device
- Photoelectric safety device
- Safety stop and safety latch
- Preset counter (6 digits)
- Load detection device
- Misfeed detection device
- Frequency converter
- Base screw and base plate, shockproof device
- Safety frame and safety ladder
- Power outlet
- Quick die changer

产品特点

- 高性能控制器/驱动部件/电磁离合器/汽动元件、轴承等高端配置。
- 国际冲压设备技术等级，机器指标的测验。
- 高响应多功能叠加扩容/高品质工控处理器。
- 高内存级模块/个性设计特许软件编制。
- 高兼容多轴向变速驱动/自动化装备线机载扩展。
- 高智能人机界面/高频响实时控制/以太网&USB端口。

Product Features

- High-end configuration of high-performance controller / drive components / electromagnetic clutch / pneumatic components, bearings.
- International stamping equipment technical grade, machine index test.
- Highly responsive multi-function overlay expansion / high quality industrial control processor.
- High memory level module / personality design licensed software.
- Highly compatible multi-axis variable speed drive / automated equipment online expansion.
- Highly intelligent human-machine interface / high-frequency sound real-time control / Ethernet & USB port

本公司随时进行研究改善的工作，因此本型录内所规定尺寸及设计特性，得以变更，不另行通知。
The Company is constantly working on research and improvement. Therefore, the size and design features specified in this manual are subject to change without notice.

400~1000T
STRAIGHT COLUMN TYPE DOUBLE CRANKSHAFT POWERFUL PRESS

STD SERIES
直柱型双曲轴强力冲床

滑块八面导向，导轨长，保证运行精度。液压过载保护装置，过载自动紧急停车，保护压力机和模具安全，使用方便。

The slider is guided by eight sides with long guide rail to guarantee the operation precision. Hydraulic overload protection device, overload automatic emergency stop, protect the press and mold safety, enable convenient operation.

技术参数 *Technical parameters*

名 称	Name	规格	STD-400		STD-500		STD-600		STD-800		STD-1000	
型式	Model		S型	H型	S型	H型	S型	H型	S型	H型	S型	H型
吨数	Tonnage	ton	400		500		600		800		1000	
能力发生点	Rated tonnage point	mm	13	7	13	7	13	9	13	9	13	9
行程长	Stroke length	mm	400	300	400	300	400	300	400	250	400	300
行程数	Number of strokes	s.p.m	15–30	30–60	15–30	30–60	15–30	25–50	15–30	25–50	15–25	25–40
最大模高	Maximum die height	s.p.m	600	650	650	700	650	700	700	700	1000	1050
滑块调整量	Slider adjustment volume	mm	150		200		200		200		250	
上工作台尺寸	Upper table size	mm	2800x1300		3100x1400		3600x1400		3600x1600		4600x1800	
下工作台尺寸	Lower table size	mm	2800x1400		3100x1500		3600x1500		3800x1800		4600x1800	
侧向开口	Side opening	mm	850x600		950x650		1000x700		1000x800		1200x900	
模垫能力	Die cushion capacity	mm	60		70		80		80		80	

标准配置 *Standard configuration*

- 变频器 • Frequency converter
- 油压式过载保护装置 • Oil hydraulic overload protection device
- 电动式滑块调整装置 • Electric slider adjustment device
- 独立式控制箱 • Freestanding control box
- 移动式操作台 • Mobile console
- 数字式模高指示器(0.1MM) • Digital die height indicator (0.1mm)
- 电动黄油润滑装置 • Electric butter lubrication device
- 电源插座 • Power outlet
- 二度落保护装置 • Secondary drop protection device
- 误送检测装置 • Misfeed detection device
- 预调计数器6位数 • Preset counter (6 digits)
- 喷风装置1/2”一回路 • Air blast device 1/2” primary loop
- 空气源接头1/2” 二回路 • Air source connector 1/2” primary loop

选择配置 *Optional configuration*

- 模垫装置 • Die pad device
- 光电安全装置 • Photoelectric safety device
- 滑块上部打料装置 • Slider upper feeding device
- 安全挡块及安全插销 • Safety stop and safety latch
- 防震装置 • Shockproof device
- 模具照明灯 • Die lighting lamp
- 快速换模装置 • Quick die changer
- 移动式台车 • Mobile trolley
- 自动送料系统 • Automatic feeding system

产品特点 *Product features*

- PLC电气集中控制，具有急停、寸动、单次、连续操作规范。
- 干式气动摩擦离合器,噪音小,离合扭矩大,制动角度小,维护方便。
- 机身为横梁、立柱、底座分体闭式结构,用四根拉紧螺杆拉紧,刚性好(400~600)

- PLC electrical centralized control, with emergency stop, inching, single, continuous operation specifications.
- Dry pneumatic friction clutch, low noise, large clutch torque, small brake torque and easy maintenance.
- The fuselage is a closed structure with beams, columns and bases. It is tensioned by four tensioning screws and has good rigidity (400–600).

本公司随时进行研究改善的工作，因此本型录内所规定尺寸及设计特性，得以变更，不另行通知。
The Company is constantly working on research and improvement. Therefore, the size and design features specified in this manual are subject to change without notice.

400~800T
CLOSED TYPE DOUBLE POINT GANTRY PRESS

APG SERIES
闭式双点龙门冲床

该冲压设备广泛应用于汽车制造、家电制造、电机电器制造、仪器仪表、医疗器械、五金等行业。

The stamping equipment is widely applied in automobile manufacturing, home appliance manufacturing, electrical appliance manufacturing, instrumentation, medical equipment, hardware, etc.

技术参数 *Technical parameters*

名 称	Name	规 格	APG-400	APG-500	APG-600	APG-800
吨数	Tonnage	ton	400	500	600	800
冲力发生位置	Rated tonnage point	mm	3	3	2	2
每分钟行程数	Number of strokes per minute	s.p.m调速	80-160	70-140	70-120	60-100
行程	Stroke	mm	40	40	50	50
最大闭合工作高度	Maximum closed working height	mm	520	520	580	600
滑块调整量	Slider adjustment volume	mm	100	100	110	120
上工作台面积	Upper table area	mm	2700*1100	3000*1200	3200*1300	3600*1500
下工作台面积	Lower table area	mm	2700*1200	3000*1300	3200*1400	3600*1600
侧向开口尺寸	Side opening size	mm	700	800	1000	1200
主电动机	Main motor	kw*p	55	75	90	110
底座落料孔	Base blanking hole	mm	2300*500	2600*580	2800*620	3200*680
最大上模重量	Maximum die feeding weight	kg	2000	2700	3200	3600
使用空气压力	Applied air pressure	kg/cm2	6	6	6	6

产品特点

- 高刚性机身分为横梁、立柱、底座，分体闭式结构，用四根拉紧螺杆拉紧，机身刚性好、变形小：
- 采用偏心轴，左右方向布置，两连杆中心距大，制动角小，使用寿命长：
- 滑块采用八面导向全构造，导轨长，保证运动精度：
- 采用液压过载保护装置，使用可靠且维护方便：
- 采用稀油强制润滑系统，具有油路故障报警功能：
- 可选配气垫、移动工作台

Product Features

- The fuselage is a closed structure with beams, columns and bases. It is tensioned by four tensioning screws and has good rigidity and small deformation.
- The eccentric shaft is arranged in the left and right directions, the center distance between the two links is large, the brake is small, and the service life is long:
- The slider is guided by eight sides in full configuration with long guide rail to guarantee the motion precision.
- It applies hydraulic overload protection, and is reliable and easy for maintenance:
- It adopts thin oil forced lubrication system and is provided with oil circuit fault alarm function:
- Optional cushion and mobile table

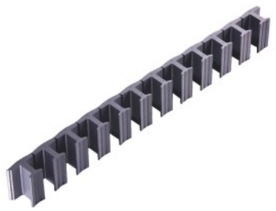

本公司随时进行研究改善的工作，因此本型录内所规定尺寸及设计特性，得以变更，不另行通知。
The Company is constantly working on research and improvement. Therefore, the size and design features specified in this manual are subject to change without notice.

250~1600T
KNUCKLE COLD & WARM FORGING PRESS

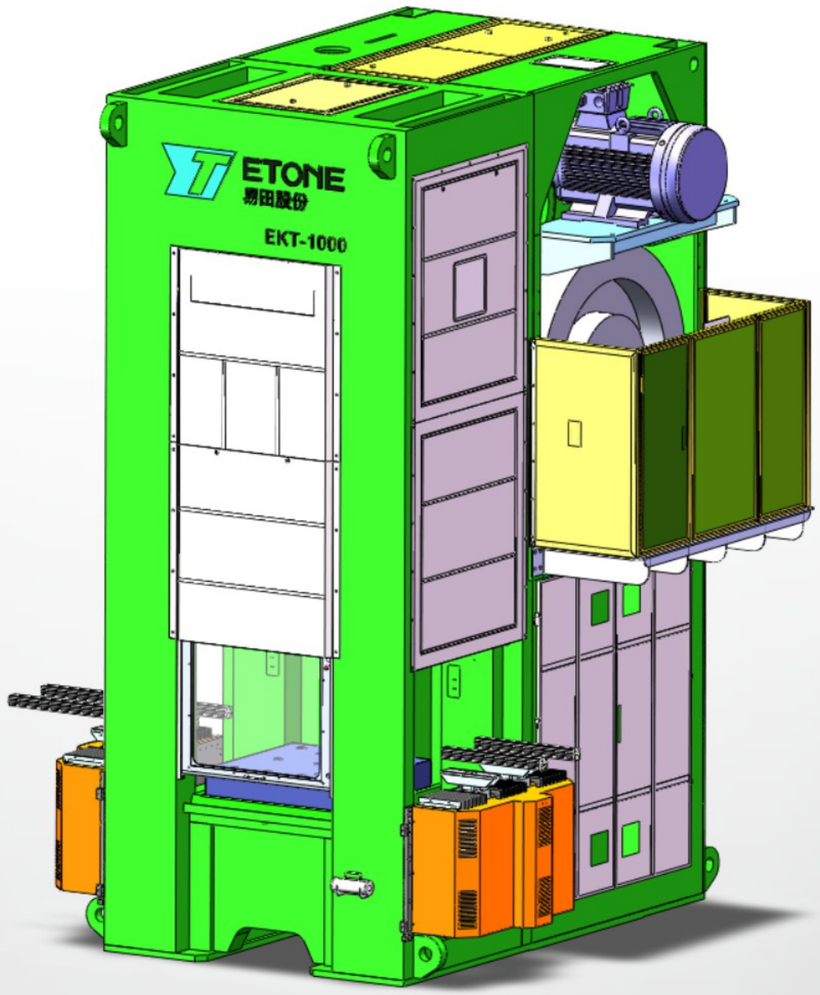

EKT SERIES
肘杆式冷温锻精密压力机

冷温锻压力机是加工用于冷温锻工艺精密锻件的专业设备件属于精密模锻范畴，广范用于汽车、船舶、航空、五金工具、工程机械等领域。

Cold-temperature forging press is a professional equipment for processing cold-temperature forging process precision forging, which belongs to the field of precision die forging, widely used in automobiles, ships, aviation, hardware tools, engineering machinery and other fields.

技术参数 *Technical paramet*

名称		Name		规 格	EKT-250	EKT-400	EKT-650	EKT-800	EKT-1000	EKT-1300	EKT-1600
吨数		Tonnage		ton	250	400	650	800	1000	1300	1600
能力发生位置		Nominal force stroke		mm	7	10	10	10	13	13	13
每分钟行程数		Unloaded continuous stroke number		SPM	30～60	25～45	20～40	20～40	20～30	15～30	15～30
行程		Slide stroke length		mm	160	200	250	250	250	250	250
最大装模高度		Die height		mm	400	450	550	650	650	680	700
滑块调整量		Slide adjustment		mm	50	50	50	50	50	50	50
滑块尺寸（左右X前后）		Slide area (LRxFB)		mmXmm	600×400	700×600	800×700	900×800	900×900	1200×1000	1300×1100
工作台尺寸（左右X前后）		Bolster area (LRxFB)		mmXmm	600×500	700×600	800×700	900×900	1000×900	1200×1000	1300×1100
工作台厚度		Bolster area thickness		mm	120	120	150	150	160	180	250
上顶出	型式	Upper ejector device	Type		气缸/氮气弹簧	气缸/氮气弹簧	气缸/氮气弹簧	气缸/氮气弹簧	气缸/氮气弹簧	气缸/氮气弹簧	气缸/氮气弹簧
	顶出力/顶出行程		Ejector force/stroke	ton/mm	1.2/15	5/50	6/50	8/100	10/100	13/100	16/100
下顶出	型式	Lower ejector device	Type		机械式	机械式	机械式	机械式	机械式	机械式	机械式
	顶出力/顶出行程		Ejector force/stroke	ton/mm	13/80	20/100	35/110	40/110	50/110	60/110	65/110
工位数		Station number		个	2	3	3	3	3	3	3
主电机		Main motor power		Kw	30	37	45	90	110	160	250

以上技术参数可根据要求适当修改。 The above technical parameters can be modified as required.

上下顶料形式和参数可以根据客户要求设计。 Upper and lower topping form and parameters can be designed according to customer requirements.

本机结构和曲柄连杆机构的行程曲线对比 单位:(mm)

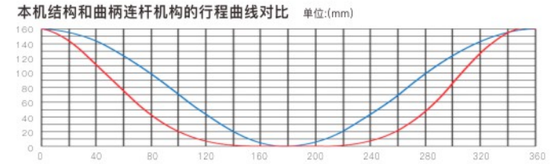

设备特点

- 机身结构合理刚度高，综合间隙小,提高产品精度和模具的使用寿命，自动化程度高。
- 滑块在下死点附近的速度非常慢，在工作行程末端附近产生最大压力，且保持较长的时间。加工范围广，下死点的位置精度较高，作业能量高。
- 滑块调整马达使用伺服电机，并带有高精度的编码器来调整滑块高度，可使闭模高度精确到0.01mm。
- 采用湿式离合制动器，噪音和振动小。
- 适用锻件：齿轮、钟形殼、变速箱中间轴/输出轴、爪极等。

Main feature

- The structure of the fuselage is reasonable, the rigidity is high, the comprehensive clearance is small, and the product accuracy and the service life of the mold are improved.
- The speed of the slider near the bottom dead center is very slow, creating maximum pressure near the end of the working stroke and maintaining it for a long time. The processing range is wide, the position accuracy of the bottom dead point is high, and the working energy is high.
- The slider adjusting motor uses a servo motor with a high-precision encoder to adjust the height of the slider, allowing the closing height to be accurate to 0.01mm.
- Using wet clutch brake, noise and vibration is small.
- Applicable forgings: gear, bell shell, transmission intermediate shaft/output shaft, claw pole, etc.

标准配置 *Standard configuration*

油压过载保护装置	Oil pressure overload protection device
自动润滑装置	Automatic lubricating device
平衡气缸自动给油装置	Balancing cylinder automatic oil feeding device
滑块平衡装置	Slider balancing device
超程检测装置（上死点检测）	Overstroke inspecting device
生产计数器	Production counter
数据库	Database
电子式行程数表示（SPM）	Electronic stroke number indicator
光电安全装置	Photoelectric safety device
预留自动化电气接口	Reserved automatic electrical interfaces
空气喷射器/空气出口	Air ejector/air outlet
数控系统及触摸屏显示	Numerical control system and touch screen panel
紧急停止按钮	Emergency stop button
双手操作按钮台	Both hands operation table
电子式曲轴角度显示器	Electronic crankshaft angle display

特别任选附属装置 *Optional accessory devices*

吨位仪	Tonnage monitor
滑块上打料装置	Slider upper feeding device
浮动式油缸	Floating hydro-cylinder
模架	Die set
模内照明灯	Mould area light
前后安全门/围栏/爬梯	Front and rear security gates/fences/ladders
模具安全栓	Mould safety plug
快速换模装置	Quick die exchange device
周边自动化装置	Peripheral automation
地脚防震垫	Cushion spring

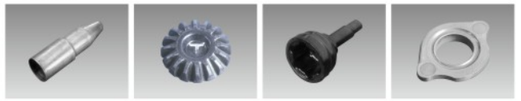

本公司随时进行研究改善的工作，因此本型录内所规定尺寸及设计特性，得以变更，不另行通知。
The Company is constantly working on research and improvement. Therefore, the size and design features specified in this manual are subject to change without notice.

400~4000T
NEW HOT DIE FORGING PRESS

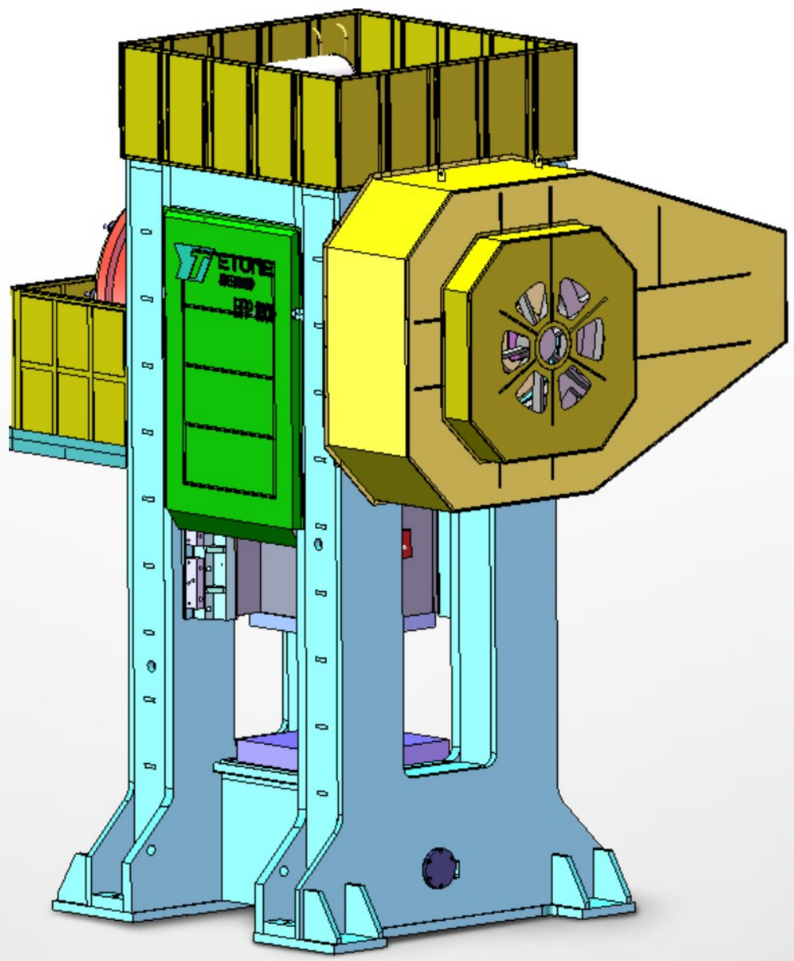

EFP SERIES
热模锻精密压力机

热模锻压力机具有锻造精度高，输出能量大，自动化程度高的特点，可以广泛用于汽车、火车、船舶、航空、矿山机械、五金工具等行业精密锻件的压力加工。

Hot die forging press has the characteristics of high forging precision, large output energy and high degree of automation, and can be widely used in the pressure processing of precision forgings in automobile, train, ship, aviation, mining machinery, hardware tools and other industries.

技术参数 *Technical paramet*

名称		Name		规 格	EFP-400	EFP-650	EFP-800	EFP-1000	EFP-1300	EFP-1600	EFP-2000	EFP-2500	EFP-3150	EFP-4000
吨数		tonnage		ton	400	650	800	1000	1300	1600	2000	2500	3150	4000
每分钟行程数		Unloaded continuous stroke number		SPM	90~110	90~100	85~100	80~90	75~95	75~85	65~85	70~80	50~60	40~50
行程		Slide stroke length		mm	160	200	220	250	260	300	300	320	340	360
最大装模高度		Die height		mm	500	555	600	755	845	915	915	900	1000	1100
滑块调整量		Slide adjustment		mm	8	10	10	10	12	15	20	22.5	25	28
滑块底板尺寸		Slide area (LRxFB)		mmXmm	550×600	650×700	750×800	920×920	920×1030	1100×1000	1180×1260	1260×1380	1300×1300	1460×1710
工作台尺寸		Bolster area (LRxFB)		mmXmm	550×600	700×800	800×900	1100×1050	950×1300	1200×1200	1210×1530	1300×1700	1350×1300	1500×2050
工作台厚度		Bolster area thickness		mm	110	120	130	150	150	180	200	220	240	250
上顶出	型式	Upper ejector device	Type		液压/氮气弹簧	液压/氮气弹簧	液压/氮气弹簧	液压/氮气弹簧	液压/氮气弹簧	液压/氮气弹簧	液压/氮气弹簧	液压/氮气弹簧	液压/氮气弹簧	液压/氮气弹簧
	顶出力/顶出行程		Ejector force/stroke	ton/mm	4/50	6/30	6/50	10/30	10/30	10/30	10/40	10/30	16/48	20/52
下顶出	型式	Lower ejector device	Type		液压/机械	液压/机械	液压/机械	液压/机械	液压/机械	液压/机械	液压/机械	液压/机械	液压/机械	液压/机械
	顶出力/顶出行程		Ejector force/stroke	ton/mm	6/16	10/16（50）	12/18（50）	20/20（50）	20/30（50）	24/37（50）	30/40（50）	40/44（80）	48/50	60/52(200)
主电机		Main motor power		Kw	30	37	45	55	90	110	160	185	220	315

以上技术参数可根据要求适当修改。The above technical parameters can be modified as required.

上下顶料形式和参数可以根据客户要求设计。Upper and lower topping form and parameters can be designed according to customer requirements.

设备特点

- 侧窗口空间合理可横向送料，宽体双支撑连杆及加长导轨设计，抗偏载能力强，结合步进式机械手实现多工位自动化锻造。
- 浮动镶块式离合器摩擦块设计，摩擦块比压小寿命长，比传统结构更换周期长2~3倍。制动扭矩大制动角度小，结构简单可靠维修方便。制动器具备强制水冷却系统，温升小可实现高速单次运转。
- 八面导轨设计导向精度高，锻件品质得到改善。
- 具有防卡模结构设计为客户提供高附加价值产品。
- 适用锻件：圆盘类，齿轮、齿轮坯、带轮、轮毂等；长轴类，带柄齿轮、带轮轴、节叉轴等；异形件，如转向、曲轴、凸轮、连杆、链轨节等。

Main feature

- Lateral feeding with reasonable side window space, wide-body double support connecting rod and lengthened guide rail design, strong anti-biased load ability, multi-station automatic forging combined with stepping manipulator.
- Floating insert type clutch friction block design, friction block than small pressure longer life, than the traditional structure replacement. The period is 2 to 3 times longer. Large braking torque, small braking Angle, simple and reliable structure and easy maintenance. Brake with a forced water cooling system, low temperature rise can achieve high-speed single operation.
- The eight-sided guide rail design has high guidance accuracy and the forging quality has been improved.
- With anti-stuck mold structure design to provide customers with high added value products.
- Applicable forgings: disc, gear, gear blank, belt wheel, wheel shell, etc.; Long shaft, gear with handle, wheel shaft, fork shaft, etc.; Special-shaped parts, such as steering, crankshaft, CAM, connecting rod, chain link, etc.

标准配置 *Standard configuration*

- 干式离合器/制动器 • Dry clutch/brake
- 模高调整装置 • Die height adjustment device
- 滑块及上模平衡装置 • Slider and upper die balancing device
- 上顶料装置 • Upper ejector device
- 下顶料装置 • Lower ejector device
- 自动润滑装置 • Automatic lubricating device
- 轴温检测装置 • Shaft temperature detection device
- 生产计数器 • Production counter
- 生产数预置计数器 • Production number Preset counter
- 电子式角度显示器 • Electronic Angle display
- 电子式闭模高度显示器 • Electronic closed mode height display
- 紧急停止按钮 • Emergency stop button
- 模具库 • Mold library

特别任选附属装置 *Optional accessory devices*

- 吨位仪 • Tonnage monitor
- 模架 • Die set
- 模内照明灯 • Mould area light
- 模具安全栓 • Mould safety plug
- 快速换模装置 • Quick die exchange device
- 周边自动化装置 • Peripheral automation
- 地脚防震垫 • Cushion spring

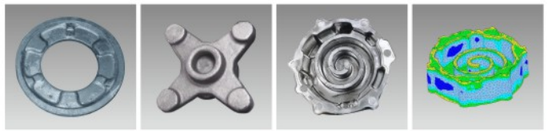

本公司随时进行研究改善的工作，因此本型录内所规定尺寸及设计特性，得以变更，不另行通知。
The Company is constantly working on research and improvement. Therefore, the size and design features specified in this manual are subject to change without notice.