Triple System GNSS Repeater Kit

GNSSRK-D-DV

Installation and User Guide

WWW.GEMSNAV.COM

Contents

Quality Commitment

All products have been strictly inspected, all are qualified products.

We promise one-year guaranty and 5-year available.

Under warranty, products gone wrong which be identified not be human factor, can be replaced free or repaired. Freight be charged by GEMS NAVIGATION.

1. System characteristics

√ System signal: Beidou B1, GPS L1, GLONASS G1, Galieo E1, E2

√ Frequency range of the antenna:1575.42±5MHz & 1561±5MHz & 1589.74±2 & 1609±2MHz;

√ Frequency range of the amplifier:1150~1650 MHz;

√ Digital gain adjustment: 0-30dB, LED digital display;

√ Serial command control;

√ Input and output port power setting;

√ Coverage Range:

GNSSRK-D-DV: A single antenna radiates a radius of 5-20 meters; The addition of the line amplifier GA40 to the front and end of the system can extend the radiation range.

2. System installation steps and schematics

1. Receiving antenna TIMING4200 mounted on the roof;
2. Cable assembly RG8 fixed along the out wall, one terminator connects TIMING4200, the another to protector at the appropriate place. In some special environment, select PE or PVC material plastic pipe to protect the cable assembly is quite sensible;
3. Lightning arrester and digital stepper amplifier fixed to the ceiling or table top of the room;
4. Cable assembly XHY240 is fixed along the ceiling of the operating place;
5. Antenna GRA10 be fixed on the ceiling.

   According to the actual environment, you can adjust positions of some parts, which can make you the adjustment, change and overhaul more easily.

System Installation Diagram

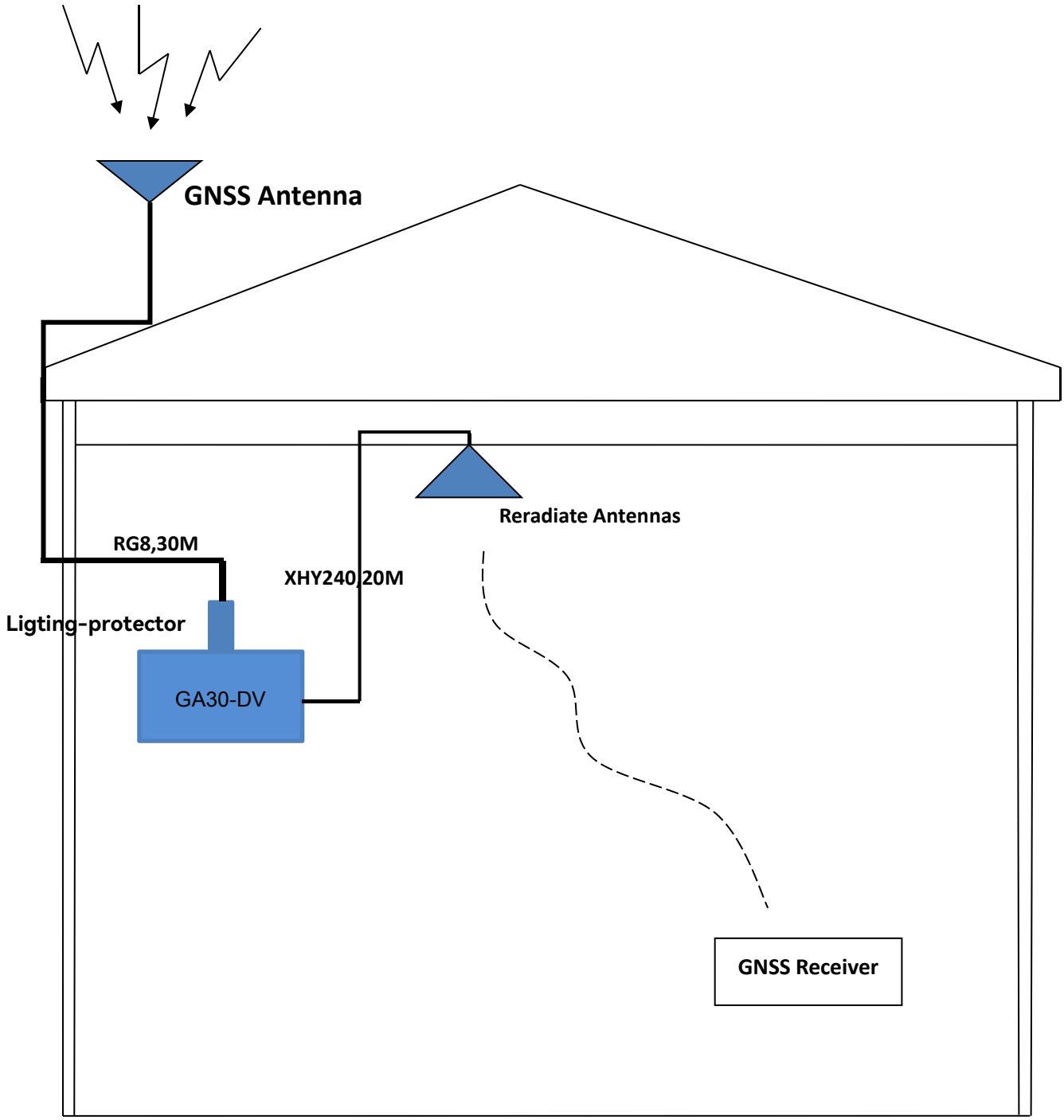

3. Description

The GNSSRK-D-DV series GNSS repeater kit is to direct outdoor triple navigation satellite signals to places where indoor or other satellite signals cannot reach, and complete various test work that should have been completed outdoors indoors.

4. Typical Application

- ✧ **For testing**

  For testing the cell- phone, PND, car navigators, tracker, survey products, etc.

- ✧ **For the purpose of GNSS signal covering**

  Bus parks, lab, aviation manufacturing hangar, trade shows, Emergency-, safety vehicles, public transportation etc.

5. Equipment List

- **GNSSRK-D-DV:**
  - ✧ Gain Controller:GA30-DV,1 ea;
  - ✧ Receiving Antenna: TIMING41100,1 ea;
  - ✧ Cable Assembly:RG8(LMR400),30M, 1ea;
  - ✧ Cable Assembly:XHY240(LMR240),20M,1 ea;
  - ✧ Sending Antenna: GRA10,1 ea.
  - ✧ Ligting-protector:1 ea;

RF coaxial cable assembly can make more choices according to the actual needs of customers, please contact our company's sales for support.

6. System Connection Diagram

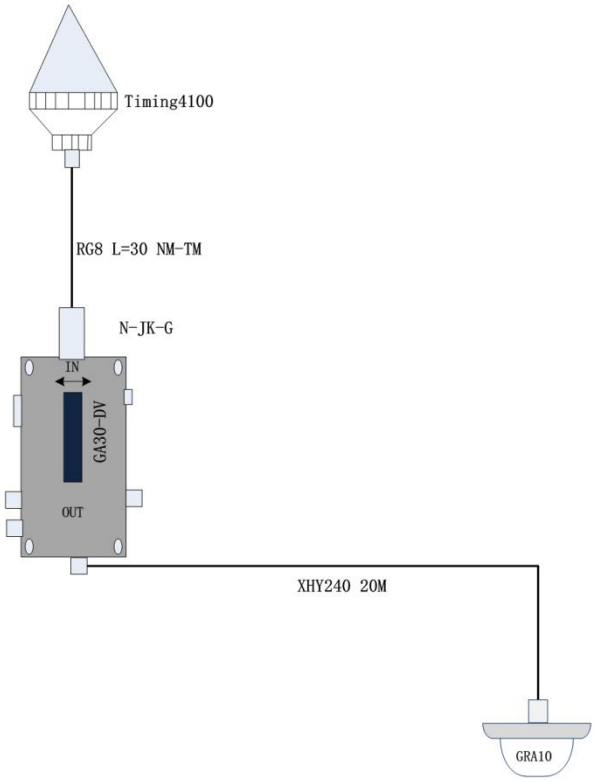

7. System Components

7.1 Digital Display Step Adjustable Amplifier GA30-DV

7.1.1 Function:

The RS232 used to adjust system gain level(0~30dB adjustable) and pass DC or block DC control.

① Input,
② Output
③ DC control, Pass DC or block DC on input and output port.
④ Gain Up
⑤ Gain Down
⑥ LED display

7.1.2 Specification

Parameter	Condition	Mini	Std	Max	Unit
Frequency Range	In ,Out, 50Ω	1150		1650	MHz
Impedance	In ,Out		50		Ω
Gain	Digital Step Adjustable, 1dB step		0~30		dB
Input VSWR				2.0:1	-
Output VSWR				2.0:1	-
Noise Figure				3	dB
Gain Flatness				3	dB
Delay Flatness			1		ns
Power Input	12V DC Adaptor		12		VDC
Current	Pass DC, No Powered configuration, DC input on Out Port			250	mA
1dB Compression				-4	dBm
Max RF Power				0	dBm
Nun. Of input			1		pcs
Nun. Of Output			1		
Max RF Input	Maximum lossless RF input			0	dBm
Working Temperature		-40°		85°	

7.1.3 The amplifier Installation

As Shown at Left:

Typical installation scenarios for the GA30-DV product line are wall-mounted or sometimes on a tabletop.

7.2 Roof Antenna TIMING4100

GPS Antenna Test Data

Frequency range[MHz]	**1575.42±5MHz & 1561±5MHz & 1609±2MHz & 1589.74MHz**
Gain[dB]	**38±2(contain LNA)**
Polarization mode	**Right-handed circular polarization**
Shaft ratio[dB]	**<5**
3dBBeam idth(°)	**110±10**
Before-and-after ratio[dB]	**>10**
connector	**N（Female）**

Mechanical parameters

Radome material	**A B S**
Size[mm]	**Φ116×102**
Weight[Kg]	**0.5(Includes bracket)**
Operating temperature[℃]	**-40~+80**
Storage temperature [℃]	**-55~+85**
Ambient humidity [%]	**90**
Ambient wind speed [Km/h]	**135**
Maximum wind speed [Km/h]	**200**
Usage environment	**Outdoor**

Antenna installation

LNA Technical Parameters

Frequency Range[MHz]	1575.42±5MHz & 1561±5MHz & 1609±2MHz & 1589.74MHz
Gain（dB）	35±2
In-band flatness（dB）	<2(1575.42±5MHz)
	<2（1561.098±5MHz）
	<2（1589.74±2MHz）
	<2（1609±2MHz）
Noise figure(dB)	≤2.0
Out-of-band suppression(dBc)	12(1575±30MHz)
	35(1575±50MHz)
	70(1575±100MHz)
Standing ratio	S11≤2.0dB(Input);S22≤2.0dB(Output)
DC voltage[V]	3.3~5
DC current[mA]	**≤50**
1dBOutput point	**≥0**
Anti-surge performance	**accord with GB/T17626.5-1999;idt IEC 6100-4-5;1995standard**

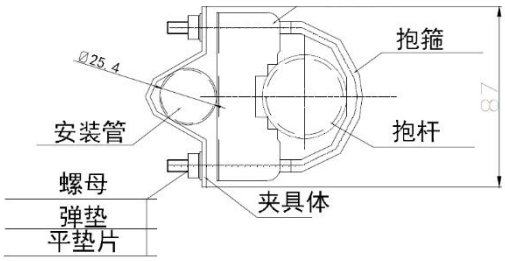

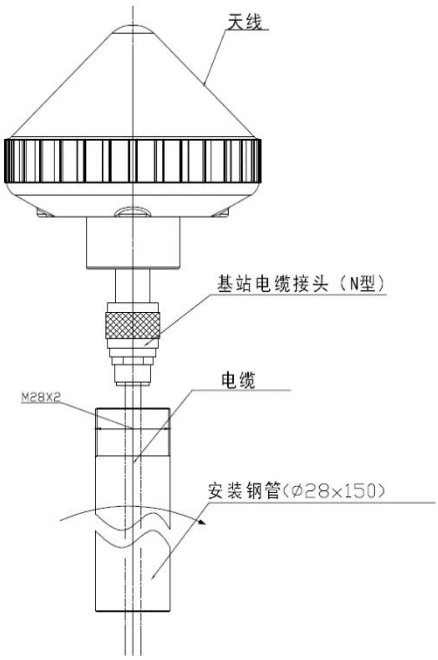

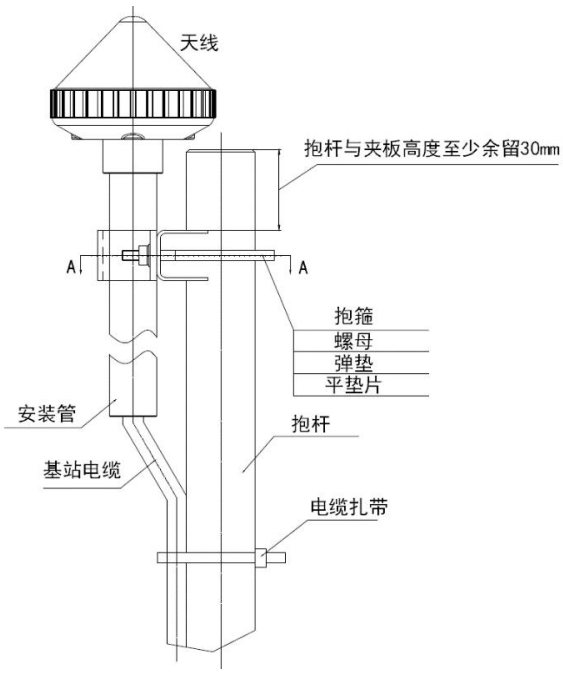

7.2.1 GNSS antenna TIMING4100 installation

GNSS antennas can be installed on the edge of guardrail where no building more than 3mhigher than antennas is visible outside 10m around the antenna. Lightening protection measures for antennas. Outdoor antennas are generally installed within the lightning protection zone of the building. Arrester should be set up additionally if the antennas are higher or beyond the lightening protection zone. The arrester is as shown in the figure below.

Installation precautions:

(1) The arrester height is determined based on the installation position of antenna and should be much higher than antennas (0.5m to 1m higher);

(2) The arrester must be fully welded with lightening protection circuit of the building and earthing resistance should be kept lower than 10ohm;

(3) The arrester (iron pillar) can be directly welded onto the lightening protection zone (as shown above in the figure) of the building with thick iron sheet.

Note: Lightening protection is an important and prudent discipline. We only provide you with suggestions and you need to employ professional enterprises with certified qualification to design and implement lightening protection measures.

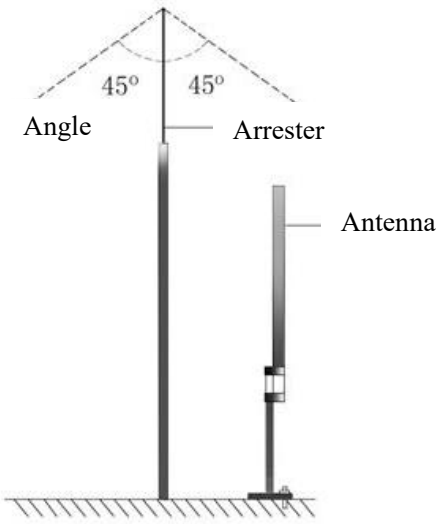

7.2.2 Lighting Protection

Usually, outdoor antenna is fixed under the range of building lighting-protection. If antenna is higher than this area or out of the range, set up lighting rod is wisdom.

Lighting rod, installation of attention as below:

1) **The height of lightning rod is apply with the position of antenna, much high than antenna(0.5~1m higher and more)**
2) **Lighting rod wield with the building circuit line, ensure ground resistant less than 10Ω.**
3) **Can directly wield rough sheet iron to building lightning-protecting ground.(as shown above)**

State: Lightning-protection is an important and cautious subject, we only suggest, design and implement lighting-protection must be done by whom was professional and have the qualification authentication.

7.3 Re-radiate Antenna GRA10

Fix the antenna to the ceiling, or to a concrete beam; usually in the center of the area where GPS signal coverage is required;

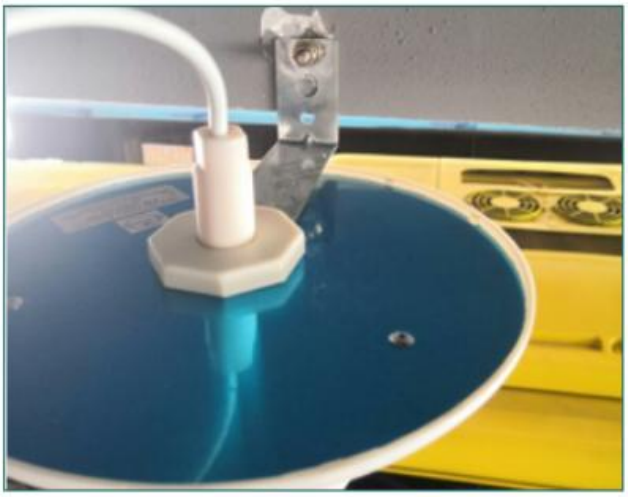

This product factory with fixed bracket, you can refer to the diagram to fix

Electrical parameters

Frequency [GHz]	1.15-1.7
Input impedance	50Ω
Polarization method	Vertical polarization
Horizontal coverage angle	360^0
Output standing wave (VSWR)	≤1.45
Maximum power	50W

Mechanical parameters

Lightning protection	DC Grounding
Input Interface	NK/SMAK
Size	Φ186X85mm
Antenna cover material	ABS, UV protection
Antenna Color	white
Operating temperature	-40~+60℃
Ultimate temperature	-55~+70℃

7.4 Cable Assembly

7.4.1 RG8

RG Series MIL-C-17 Cable

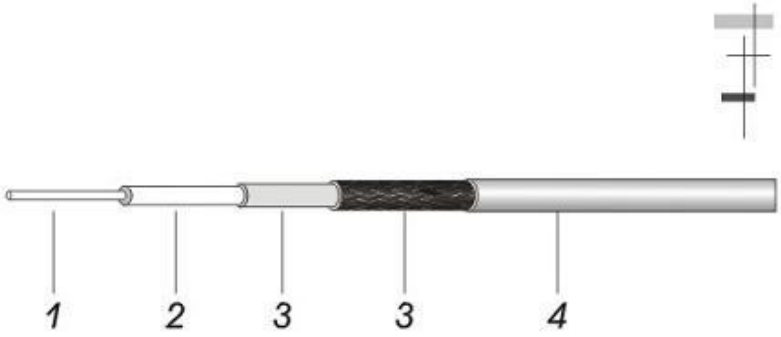

Construction Specification

	Material	Diameter(mm)
1. Inner Conductor	Bare Copper	2.74
2. Dielectric	Physical Foam Polyethylene	7.24
3. Outer Conductor	Bonded Aluminum Foil +Tinned Copper Braid	8.13
4. Jacket	PE	10.29

Electrical Characteristics

Capacitance(pF/m)	78.4
Impedance(ohm)	50
Velocity(%)	85
Shielding Effectiveness(>dB)	90
Max. Oper. Voltage(VMS)	4000
Operating Temp. (℃)	-40 to 80

Attenuation

Frequency(MHz)	Attenuation(≯dB/100m)
30	2.2
50	2.9
150	5.0
220	6.1
450	8.9
900	12.8
1500	16.8
1800	18.6
2000	19.6
2500	22.2
5800	35.5

7.4.2 XHY240

Low Loss Cable

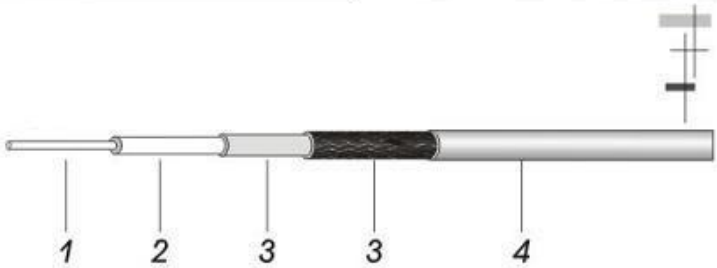

Construction Specification

	Material	Diameter(mm)
1. Inner Conductor	Solid Copper	1.42
2. Dielectric	Physical Foam Polyethylene	3.81
3. Outer Conductor	Bonded Aluminum Foil + Tinned Copper Braid	4.52
4. Jacket	Black PVC or Polyethylene	6.10

Electrical Characteristics

Capacitance(pF/m)		79.4
Impedance(ohm)		50
Velocity(%)		84
Inner Conductor DC Resistance(Ω/km)		10.50
Outer Conductor DC Resistance(Ω/km)		12.76
Shielding Effectiveness(dB)		>90
VSWR≤(Return loss≥dB)		
5-3000MHz	1.20	(20)
800-1000MHz	1.10	(26)
1700-2000MHz	1.15	(23)
2000-2400MHz	1.15	(23)

Mechanical and Environmental Characteristics

Min. Bend Radius(mm)	30
Storage Temp.(℃)	-40to+80
Installation Temp.(℃)	-40to+80
Operating Temp.(℃)	-40to+80

Attenuation and Avg. Power(20℃)

Frequency(MHz)	Attenuation(±dB/100m)	Avg. Power(KW)
30	4.40	1.30
50	5.70	1.00
150	9.90	0.58
220	12.00	0.48
450	17.30	0.33
900	24.80	0.23
1500	32.40	0.18
1800	35.60	0.16
2000	37.70	0.15
2500	42.40	0.13
3000	46.50	0.12
5800	66.80	0.09

7.5 Direction Of Installation

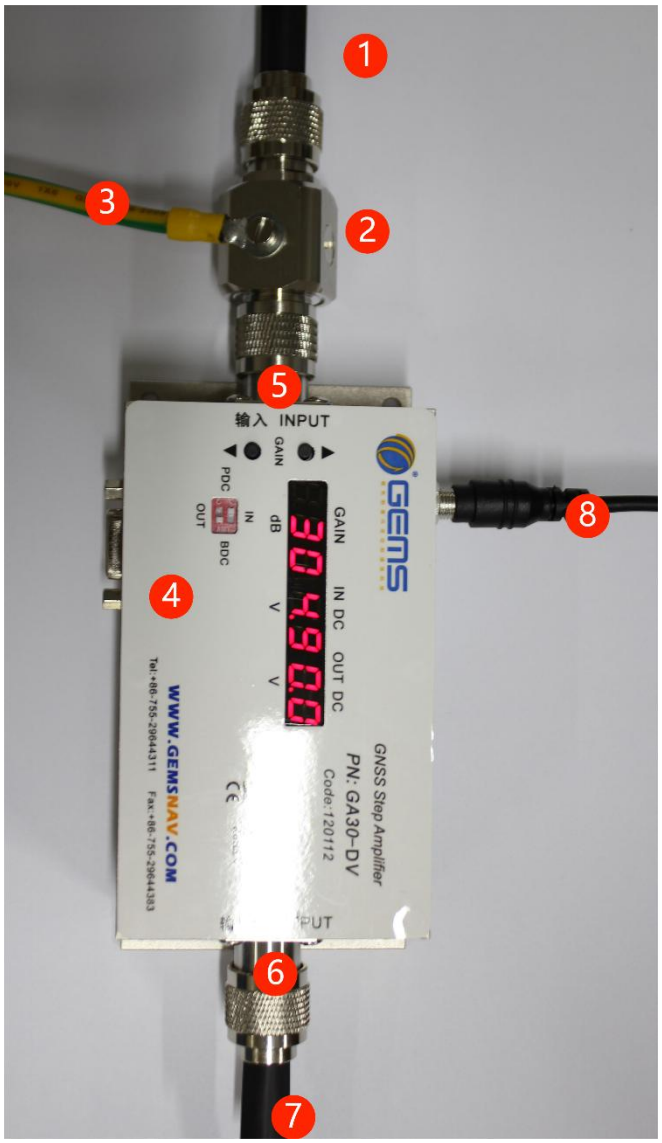

As Shown at Left:

① **Cable assembly: connect to receiving antenna, S440;**

② **Protector;**

③ **Earth connection;**

④ **Gain controller:GA30-DV;**

⑤ **Input of Gain controller, not reverse;**

⑥ **Output of Gain controller, not reverse;**

⑦ **Cable assembly: connect to transmitting antenna, GRA10.**

⑧ **Power pack;.**

7.5.1 Installation of Lightning Arrester Precautions

Earth resistance is assured less than 10Ω;

One end of the lighting-protection line should connect to grounding ears, the other one is wielded to the nearest building to assure grounding

8 Typical Faults and Solutions

GNSS repeater/GPS booster/GPS signal amplifier GNSSRK-D-DV fault location and remove:

First: To determine whether the GA30-DV power supply connected, through the GA30-DV digital display can be observed to lose whether there is voltage output, such as digital display shows a voltage of about 5V, indicating normal power supply, GA30-DV work properly. Otherwise, check the power outlet for good contact.

Second: If the digital stepper is adjustable, the input port of the amplifier has a voltage of 5V, you need to check whether the fixing is steady between GRA10 and the cable.

Third: If the below two step were ok, please check the outdoor antenna timing4100. You can, check the voltage between axis of the cable connector and the outer shielding layer to make sure it's 5V.If no voltage, the circuit has fault, please contact our technical support. If 5V, the antenna timing4100 can be suspected.

9 Frequency Reference Table

Gllobal/Compass Navigation Satellite Systems(GNSS/CNSS)	5						2						6/3				6					1									
Frequency (MHz)	1164	1176	1188	1192	1207	1215	1219	1227	1239	1245	1252	1259	1266	1268	1278	1290	1535	1540	1545	1550	1558	1558	1561	1563	1575	1587	1592	1602	1609	1616	2491
GPS(USA) L1,L2,L2C,L5	L5+/-12						L2/L2C+/-12											L6+/-5						L1+/-12							
Glonass(Russia) G1,G2										G2+/-7																			G1+/-7		
Galileo(Europian) L1,E1,E2,E5(E5a,E5b),E6	E5+/-15 E5a+/-12 E5b+/-12												E6+/-12					L6+/-5				E2		L1+/-17			E1				
Compass (Beidou 2,China)				B2+/-10								B3+/-10										B1+/-2									
Beidou 1 (China,Tx(LHCP)/Rx(RHCP)																														L	S
IRNSS (India)			L5+/-15																					L1+/-12							S+/-15
OmniStar																	O+/-14---->														