This drawing is a controlled document

# OUTLINE DRAWING

| REV | DESCRIPTION | DRAWN BY | APPROVED BY | DATE |
|---|---|---|---|---|
| A | FIRST ISSUES | David.M | SK.T | 12-08-2015 |
| | | | | |

## RECOMMENDED PCB LAYOUT

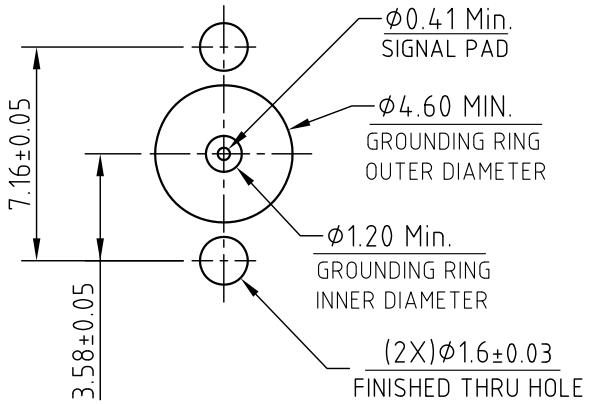


## DETAIL A
SCALE 20:1

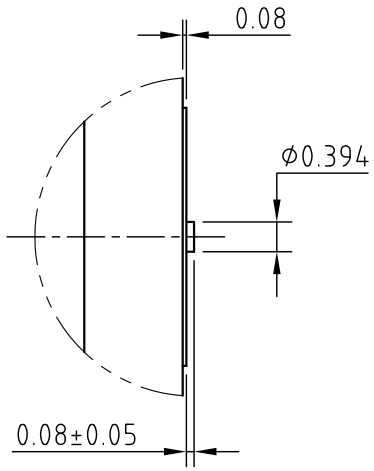


## DETAIL B
SCALE 15:1

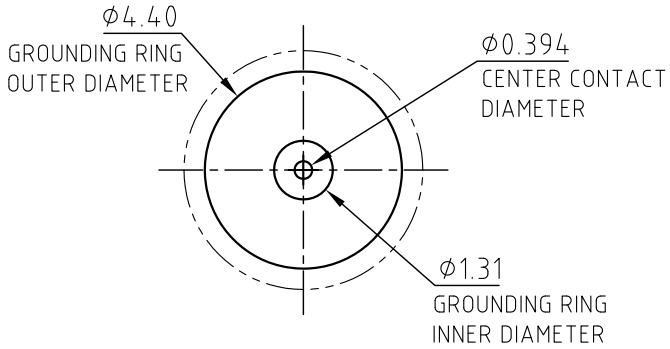


## MOUNTING DRAWING SCALE 5:1

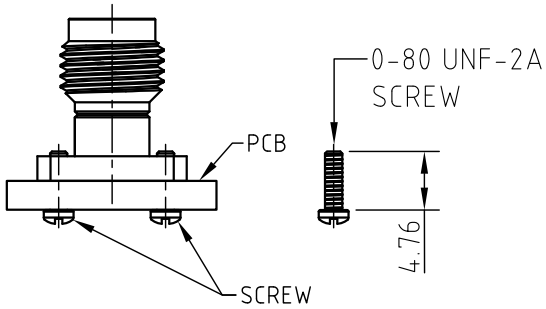


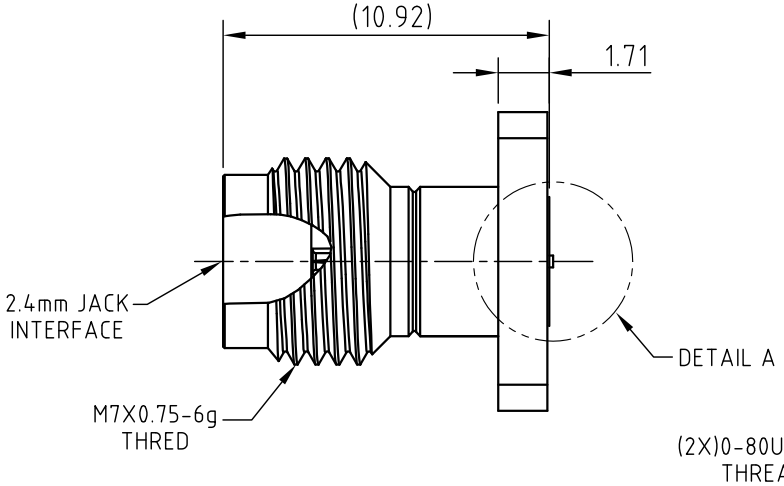


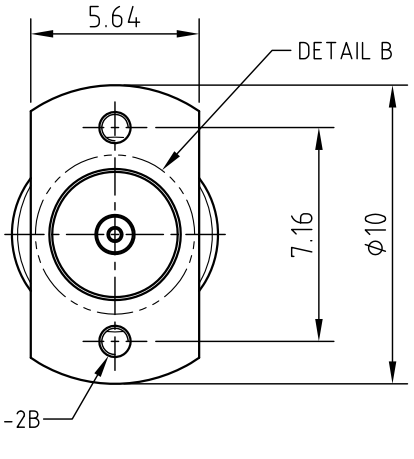


NOTE:
1. IMPEDANCE: 50 OHM
2. FREQUENCY RANGE: DC 0~50 GHZ
3. VSWR: 1.40 max.
4. INSERTION LOSS: 0.03 X SQRT(F(F IN GHz))
5. DWV: 500 VRMS MIN.
6. OPERATING TEMP: -40C° TO +155C°
7. APPLY FOR PCB THICKNESS: 0.8~2.45mm (RECOMMENDED PCB THICKNESS:1.6mm)

| BODY | STAINLESS STEEL | PASSIVATED |
|---|---|---|
| DIELETRIC | PTFE | NATURAL |
| CENTER CONTACT | BECU | GOLD |
| DESCRIPTION | MATERIAL | FINISH |

| | | | |
|---|---|---|---|
| Dimension: mm | Series: 2.4MM | Cable: N/A | 昆山德普福电子科技有限公司 D.P.F technology Co.,LTD |
| General tolerance Unless Otherwise Specified<br>0 Places: ±0.2<br>1 Places: ±0.2<br>2 Places: ±0.2<br>3 Places:<br>Angles: | Product Spec.: | Assembly Instr.: | |
| | Drawn: David.M 12-08-2015 | | Title: 2.4MM JACK,2 HOLE FLANGE 0-80 THREAD, 0.8~2.45MM BOARD |
| | Checked: Andy.L 12-08-2015 | | |
| | Approved: SK.T 12-08-2015 | | Part Number: RJ3S-0F |
| Weight: -- | CUSTOMER DRAWING<br>This drawing is a controlled document | | Drawing Number: RJ3S-0F-2.4H1 Rev.: A |
| Projection: | | | Scale: 10:1 Remark: Page: 1/1 |